RDS EON CD-CH CONTROL CASSETTE RECEIVER

KRC-954R

SERVICE MANUAL

KENWOOD

© 1993-4 PRINTED IN JAPAN
B51-6582-00(O)2069

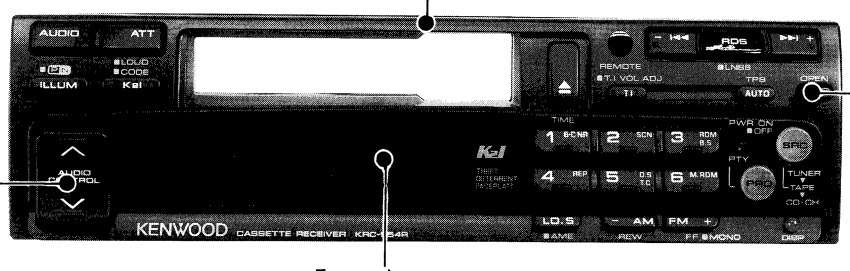

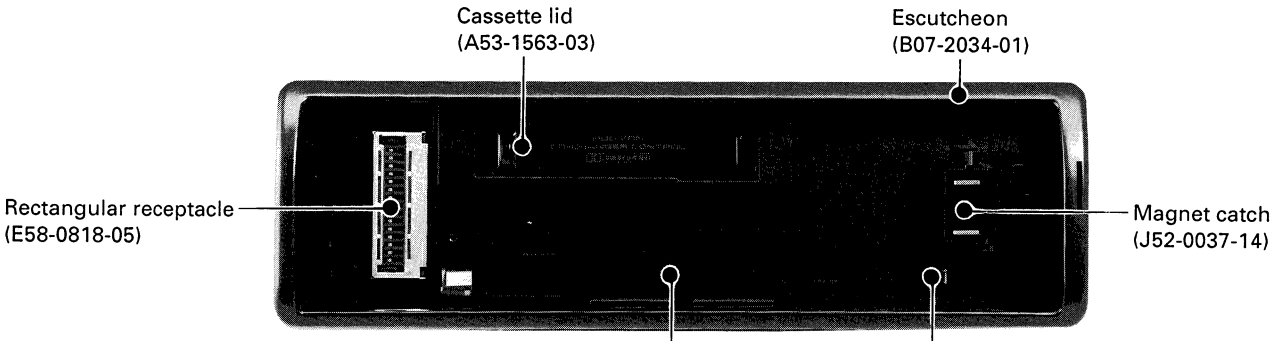

- **THEFT DETERRENT FACEPLATE**
  Model name : TDF-954R
  (Not supplied as service parts.

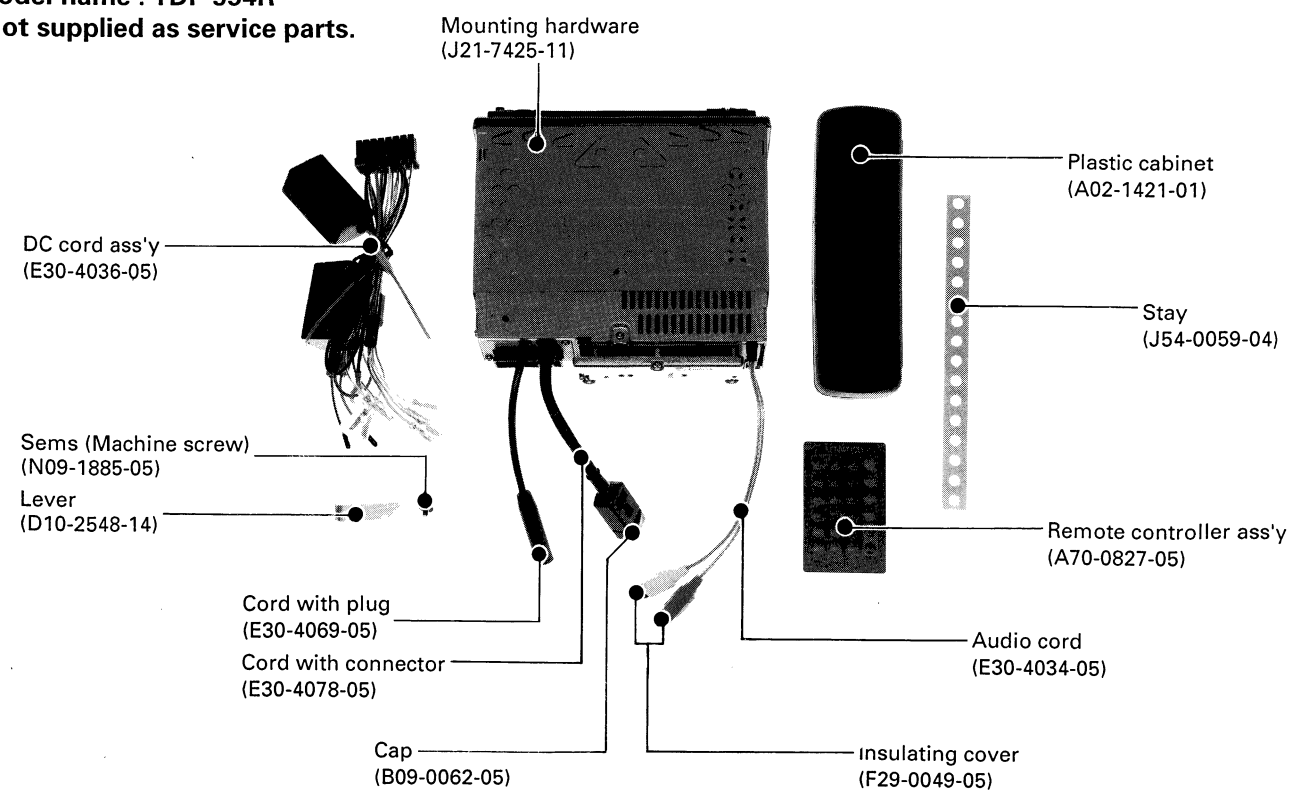

KRC-954R

CONTENTS/CONNECTIONS

CONTENTS

CONNECTIONS 2
DISASSEMBLY FOR REPAIR 3
BLOCK DIAGRAM 5
CIRCUIT DESCRIPTION
1. Description of Component 6
2. KENWOOD INTELLIGENT 2 IF (K2I) 9
3. Programme Type Codes 10
4. Security Data Read /Write Specifications 12
5. Block Diagram of Microcomputers and Surroundings 13
6. IC1 : 75004GB-863-3B4 (X25-7042-71) Panel Microcomputer 14
7. IC17 : 75004GB-864-3B4 (X14-5002-71) Cassette Mechanism Microcomputer 21
8. IC16 : M38067M8D094FP (X14-5002-71) System microcomputer 23
9. IC1 : LC7218M (X14-5002-71) PLL 26
MECHANISM OPERATION DESCRIPTION 27
ADJUSTMENT 34, 36
ABGLEICH 35
PC BOARD 37
SCHEMATIC DIAGRAM 43
EXPLODED VIEW (MECHANISM) 55
(UNIT) 56
(FACEPLATE) 57
PARTS LIST 58
SPECIFICATIONS ..... BACK COVER

CONNECTIONS

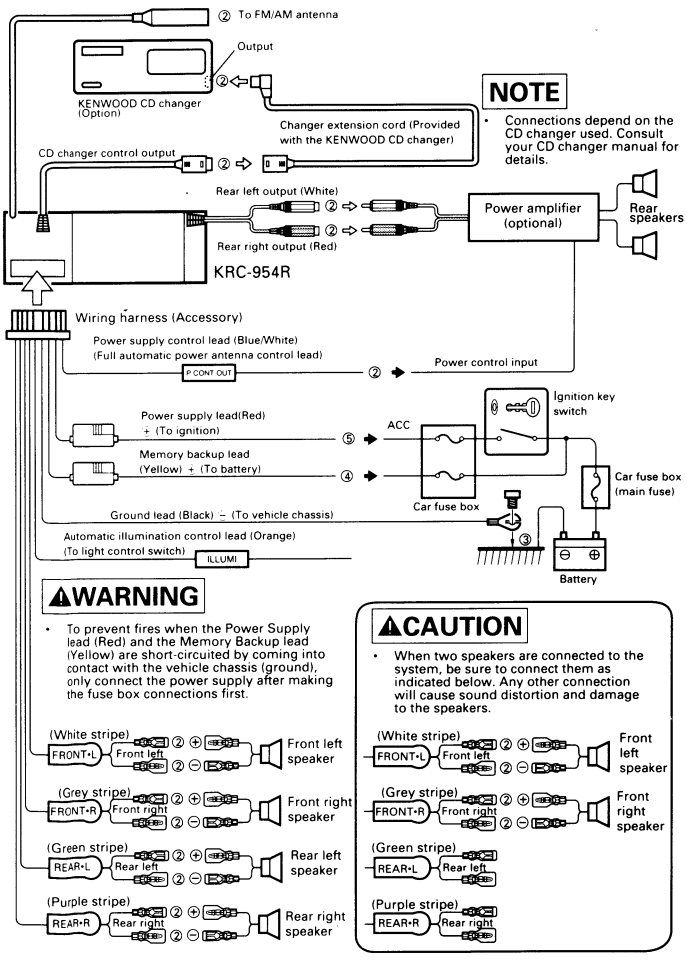

■ **Example of telephone interface connection**

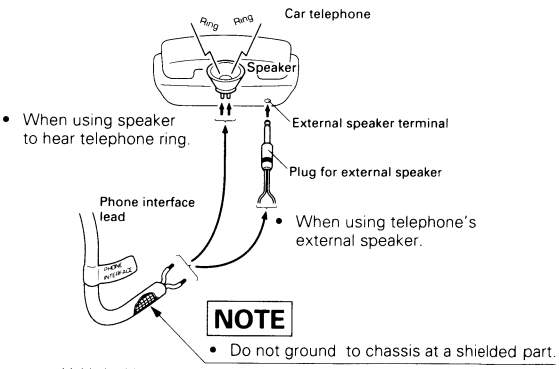

*Be sure to use a shielded cable.

Replacing battery of remote control unit

- The battery life is approximately a half year. When the life has expired, plaese replace the battery with a new battery.
- The remote control unit uses a lithium battery (CR2025).
- Insert battery following the illustration inside the battery box, taking care not to reverse the ⊕ and ⊖ polarity.

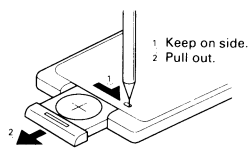

DISASSEMBLY FOR REPAIR

1. Remove the screw (❶) and remove the top panel.
2. Press the OPEN button (❷) and remove the control unit.
3. Remove the sub panel by pushing the 4 claws (❸) open, and remove the flexible wire (❹).

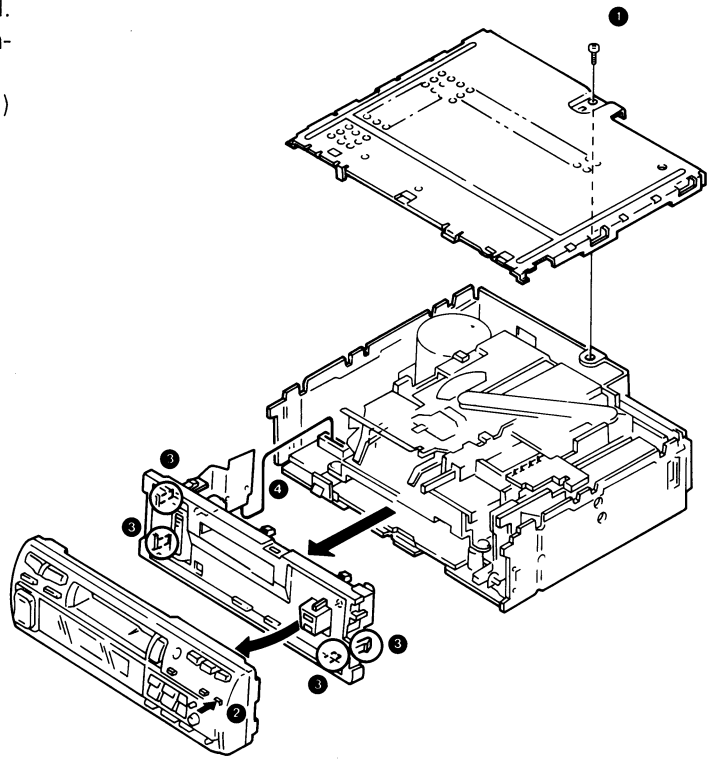

1. Unplug the board connector (❺).
2. Remove the 4 screws (❻), move the cassette mechanism upward to make a space below it (❼), and unplug the connector (❽).

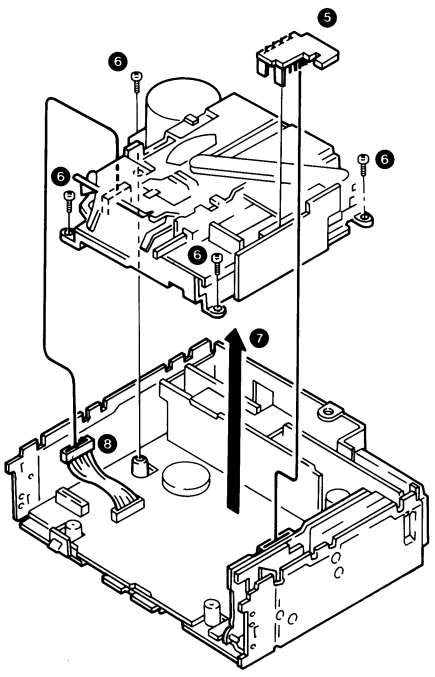

KRC-954R

DISASSEMBLY FOR REPAIR

1. Straighten the 3 claws (❾) on the chassis using a pair of pliers, etc.
2. Remove the 5 screws (❿). As the screw marked (❿) * is of a different type from other screws, be careful to use it in the same position at the assembly.
3. Remove the lever and the screw (⓫), and remove the board unit.

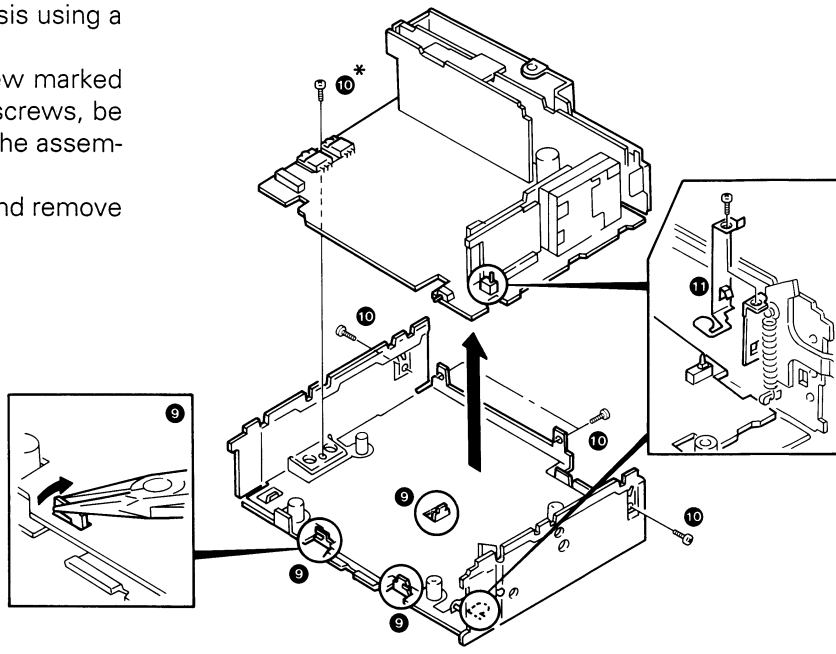

1. Remove the 5 screws (⓬).
2. While pushing the upper and lower sections (⓭) of the front case, open the lower section (⓮).
   *Be save to engage the 5 claws (⓯) securely.

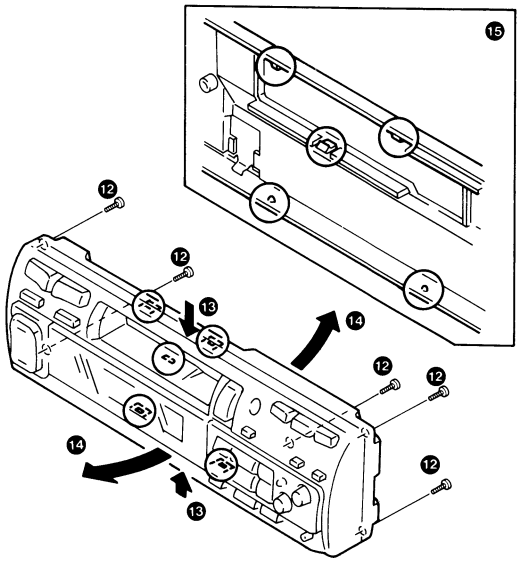

1. When assembling the rear case, fit the spring (⓰) into the hole on the case and attach the 5 screws.

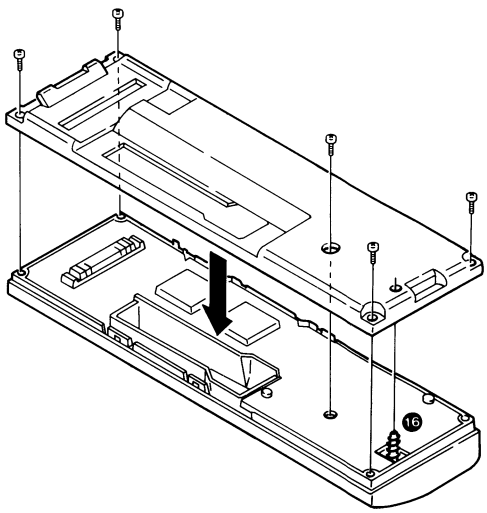

BLOCK DIAGRAM

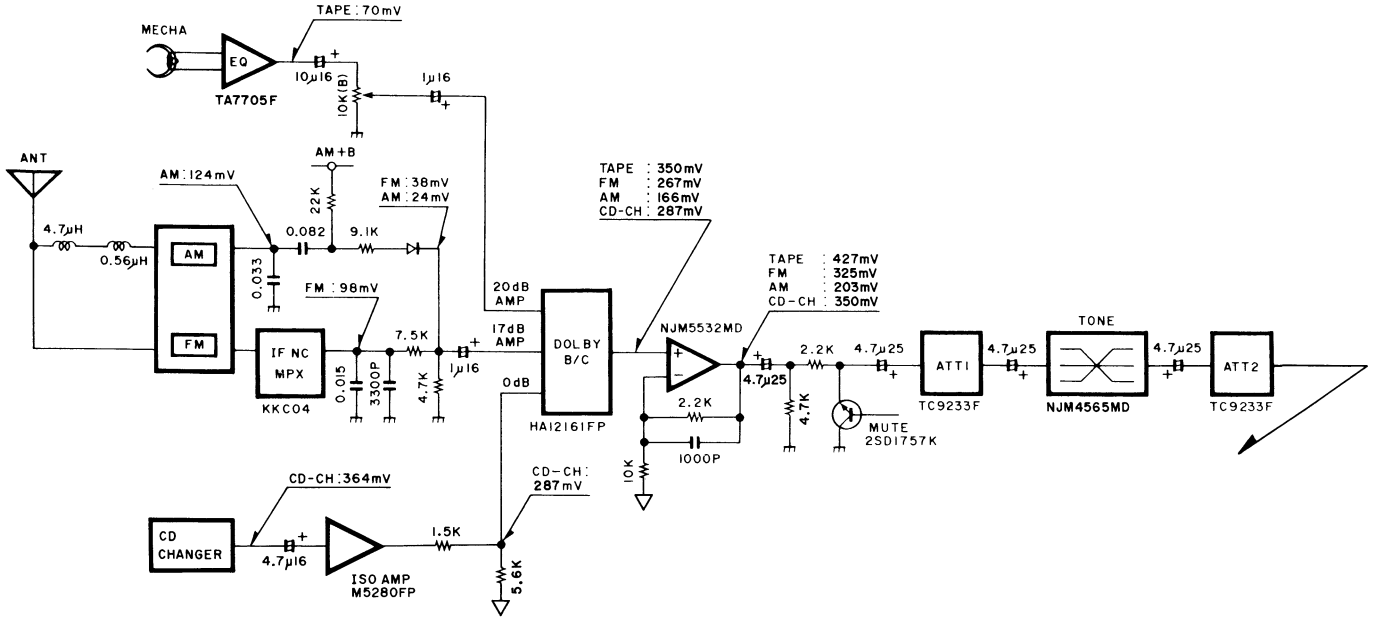

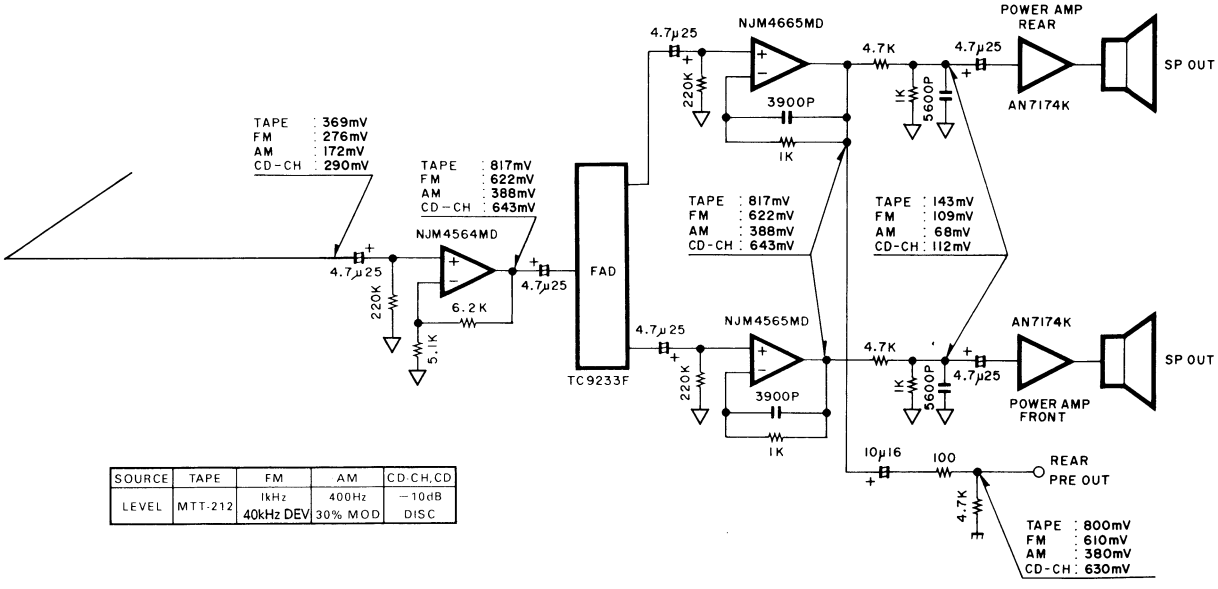

SOURCE	TAPE	FM	AM	CD-CH,CD
LEVEL	MTT-212	1kHz 40kHz DEV	400Hz 30% MOD	−10dB DISC

KRC-954R

CIRCUIT DESCRIPTION

1. Description of Component

1-1. Audio Unit (X09-5042-71)

Ref No.	Name	Use and function	Description
IC1	TA7705F	Tape EQ amp	Playback equalize, head amplifier.
IC2	HA12161FP	Dolby B.C	Dolby B/C type decoder, source switching.
IC3	M5280FP	Isolation amp	Isolation amplifier for CD-CH.
IC4	NJM4565MD	1/2 Vcc buff	
IC11	TC9233FK	E-VOL	Sound volume, loudness, tone control, fader balance, attenuator.
IC12~16	NJM4565MD	Tone and buff amp	Tone control, VOL2 and FAD input buffer.
IC17, 18	NJM4565MD	Pre amp	IC17 : Rear preamplifier. IC18 : Front preamplifier.
Q1, 2	2SD1757K	EQ mute	Muting of EQ amplifier output.
Q11, 12	2SD1757K	mute	

1-2. Synthesizer Unit (X14-5002-71)

Ref No.	Semi. name	Use and function	Operation
IC1	LC7218M	PLL IC	PLL for FM/AM tuner.
IC2	TC4W66F	Analog IC	Switches LPF time constant during FM seek.
IC3	NJM4565MD	Buff	Buffer between Dolby IC and E. Volume IC.
IC4	NJM4565MD	T.ADV amp	
IC5	SAA6579T	RDS Demodulator IC	
IC6	LC6543H-4600	RDS sync μ-COM	
IC7	. . .	Code/security data memory	
IC8	TA7291P	Sub-motor drive IC	
IC9	LC3564QM-10	S-RAM	RAM for RDS data such as AF list.
IC10	TC74HC573AF	Latch	Latch between IC9 and IC16.
IC11	M5237ML	3-terminal-IC	For 8 V AVR.
IC12	PST572FMT	Reset IC	Lo when the supply voltage of IC16 drops below 4V.
IC13	AN7174K	Power amp	Front power amplifier.
IC14	AN7174K	Power amp	Rear power amplifier.
IC15	SN74HC367ANS	Inverter	For CD-CH data.
IC16	M38067M8D094FP	Master μ-COM	
IC17	75004GB-864-3B4	Mechanism μ-COM	
IC51	KKC04	IF/NC/MPX	IF/NC/MPX for K2I.
IC52	TA75S393F	Comparator	During K2I operation, switches the adjacent interference detection sensitivity by detecting over-modulation.
Q1	2SC2412K	BU detect	
Q2	2SC2412K	Acc detect	
Q3, 4	2SC2413K	IF amp	Q3: IF amplifier for Wide. Q4: IF amplifier for Narrow.
Q5	XDA124EK	LW/$\overline{\text{MW}}$ SW	
Q6	XDC124EK	Lo/$\overline{\text{Dx}}$ SW	
Q7	DTA144EK		
Q8	2SA1428	FM+B SW	
Q9	2SA1428	AM+B SW	
Q10	2SK536	Vt LPF	For AM.
Q12	XDC144EK	IC 2 control	
Q13	2SA1037K		
Q14	2SK536	FM Vt LPF	
Q15	2SC2412K	CRSC SW	
Q16	2SC2412K	CRSC drive	
Q17	2SC2412K	S-meter buff	
Q18	2SA1037K	S-meter drive	
Q19	2SC2412K	AM SD SW	
Q20	XDC144EK	FM mute SW	
Q21	DTA144EK	Narrow SW	In test mode.
Q22	XDC144EK	K2I/wide SW	

CIRCUIT DESCRIPTION

Ref No.	Semi. name	Use and function	Operation
Q23	XDC144EK	T.ADV circuit gain SW	Switches the gain for playback and fast winding.
Q24	XDC144EK	T.ADV circuit time constant SW	Switches the time constant for playback and fast winding.
Q25	XDA124EK	EQ mute inverter	
Q26	2SC2412K	T.ADV circuit inverter	
Q27	DTC144EK	MONO/ST SW	
Q28	DTB123YK	+B SW for sync μ-COM	
Q29	2SC2412K	AVR SW for sub motor	For IC8.
Q30	2SA1408 (O)	AVR drive for sub motor	For IC8.
Q31	XDC124EK	KICK SW	For IC8.
Q32	XDC124EK	S-RAM CE1 control	Inhibits read from or write to S-RAM while power is OFF.
Q33	2SB1370F8	8V AVR SW	Audio circuitry.
Q34	DTA114EK	8V AVR drive	Audio circuitry.
Q35	2SB1370F8	ILLUM AVR SW	
Q36	2SC2412K	ILLUM AVR drive	
Q37	DTA114EK	ILLUM AVR control	
Q38	XDC144EK	ILLUM AVR control	
Q39	2SB1370F8	5V AVR SW	Logic circuitry of μ-COM, etc.
Q40	2SC2412K	5V AVR control	Logic circuitry of μ-COM, etc.
Q41	DTB123YK	Power on 5V SW	
Q42	XDC144EK	Power on 5V drive	For the moment the power is switched ON.
Q43	2SA1036K	$\overline{\text{Remove}}$ 5V SW	
Q44	2SC2412K	$\overline{\text{Remove}}$ 5V drive	
Q48	DTA144EK	PWR amp STBY SW	Controlled by P.CON.
Q49	XDC144EK	PWR amp STBY SW	Controlled by P.CON.
Q50	2SC2412K	PWR amp STBY SW	Controlled by Acc detection or BU detection.
Q51	XDC144EK	Small in inverter	
Q52, 54	XDA124EK	TA/RA/CH SW	
Q53, 55	XDA124EK	□□ off/B/C SW	
Q56	XDC124EK	$\overline{\text{PWR on}}$ 5V SW	Controls IC15.
Q57	XDC144EK	DSI indicator INH.	Inhibits DSI indicator while the panel is attached.
Q58	2SC2412K	DSI indicator SW	
Q59	2SA1037K	Mute drive	
Q60	XDC124EK	Mute drive	
Q61	XDA124EK	Mute drive	
Q62	2SA1428	Motor +B SW	
Q63	DTC114EK	Motor +B drive	
Q64, 65	2SC2412K	Reel pulse buff	
Q66	2SA1428	Amver +B SW	
Q67	2SA1428	Green +B SW	
Q68	DTD123YK	Dimmer SW	
Q69	DTD123YK	Green dimmer SW	For the case in which SMALL is input.
Q70	XDC144EK	Amver +B drive	
Q71	XDC144EK	Green +B drive	
Q72	DTA144EK	Green dimmer drive	
Q73	2SC2411K	PAN 5V SW	For the case in which the panel is attached.
Q74	DTA144EK	PAN 5V drive	For the case in which the panel is attached.
Q75	XDC124EK	PAN 5V control	For the case in which the panel is attached.
Q76	DTA144EK	Manual reset SW	
Q77	XDC144EK	Manual reset SW	
Q80	2SC2411K	LCD lamp SW	
Q502	DTA144EK	AFC SW	
Q503	2SC2412K	AFC SW	
Q505	2SC2412K	CRSC SW	

CIRCUIT DESCRIPTION

1-3. Switch Unit (X25-7042-71)

Ref No.	Semi. name	Use and function	Operation
IC1	75004GB-863-3B4	Panel μ-COM	Control of display, keys and remote control, communications with Master μ-COM.
IC2	PST572DMT	Reset IC	Resets Panel μ-COM.
IC3	RS-21	Remote control sensor	
IC4, 5	LC7582E	LCD driver	
Q1	DTA143XK	INH driver	Drives the LCD driver INH signal and remote control sensor power.
Q2	DTC144EK XDC144EK	INH driver SW	

1-4. Daughter Unit (X89-2002-71)

Ref No.	Semi. name	Use and function	Operation
Q1	DTA124EK	P.CON out driver	
Q2	2SA1037K	P.CON out driver	
Q3	2SB822F	P.CON out driver	
Q4	DTC114EK	P.CON driver SW	

CIRCUIT DESCRIPTION

2. KENWOOD INTELLIGENT 2 IF (K2I)

2-1. K2I IF band switch

To take proper operation according to the radio wave condition of each country, the K2I performs automatic switching of IF band by setting the IF filter bandwidth to Wide or Narrow based on the information from three detector circuits.

The three detector circuits refer to:

1. 100 kHz beat detector (100 kHz adjacent interference detection)
2. Deviation detector (Overmodulation detection)
3. Weak strength detector (Field strength detection)

By setting the IF bandwidth automatically according to the logic rule, a high-sensitivity with low noise and optimum state in any country is implemented.

2-2. Newly developed narrow-band IF filter

The previously used IF filter could not eliminate the adjacent interference within 100 kHz completely.

The newly developed IF filter has a very narrow bandwidth characteristic compared to the previous filter, and also allows to obtain stable tuning frequency and selectivity characteristics.

To make low distortion and high separation possible even with the narrow-band filter, new circuitry is used together with it.

2-3. Description of Data of K2I

2 signal selectivity

While the selectivity within + 100 kHz with the previous ceramic filter was only about 2 dB, A selectivity of 15 to 20 dB can be achieved by using the newly developed narrow-band ceramic filter on the Narrow side. (fig. 1)

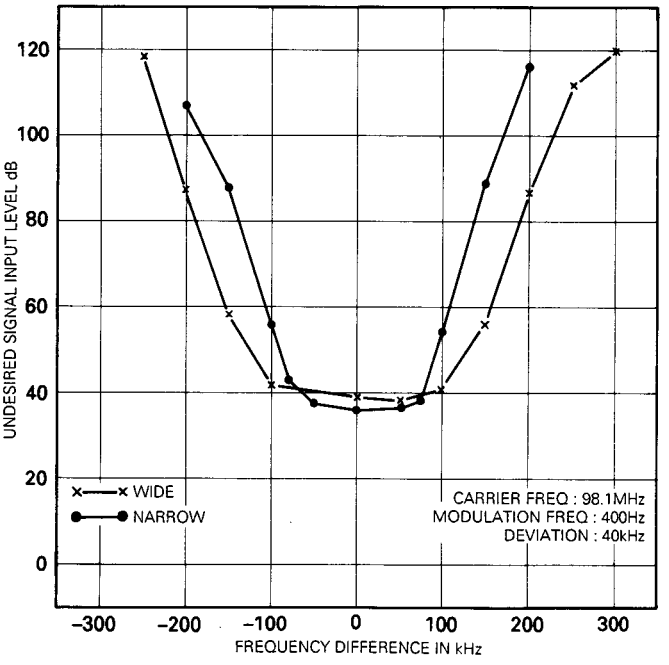

fig. 1 Notice the high selectivity (in Narrow mode) within + 100 kHz.

CIRCUIT DESCRIPTION

3. Programme Type Codes

The PTY mode allows to search the programme type the user desired based on the broadcast content data transmitted by each network. This table shows the data on the programme types. However, at present, many radio stations do not handle this service and the areas where this function is available and the programme types are limited.

Data in the last column of the table, No. 31 (Alarm) is transmitted with emergency broadcast. This programme type cannot be selected as one of the PTY programme types.

3-1

Code	Program type	English	Francais	Deutsch	
1	News	NEWS	INFOS	NEWS	
2	Current Affairs	AFFAIRS	MAGAZINE	POLITIK	S
3	Information	INFO	SERVICES	SPEZWORD	P
4	Sport	SPORT	SPORT	SPORT	E
5	Education	EDUCATE	EDUCATIF	LERNEN	E
6	Drama	DRAMA	FICTION	HOER+LIT	C
7	Culture	CULTURE	CULTURE	KULTUR	H
8	Science	SCIENCE	SCIENCES	WISSEN	
9	Varied	VARIED	DIVERS	UNTEAR	
10	Pop Music	POP M	M POP	POP	
11	Rock Music	ROCK M	M ROCK	ROCK	M
12	M. O. R Music	M. O. R M	M VARIEE	U-MUSIC	U
13	Light Classical	LIGHT M	M CL LEG	L-KLASS	S
14	Serious Classical	CLASSICS	M CL SER	E-KLASS	I
15	Other Music	OTHER M	AUTRE M	SPEZ MUS	C
31	Alarm	ALARM	ALERTE	ALARM	

3-2. Definition of the terms used to denote Programme Type

a. Speech-based categories

1. News
   Short accounts of facts, events and publicly expressed views, reportage and actuality.
2. Current affairs
   Topical programme expanding or enlarging upon the news, generally in different presentation style or concept, including documentary debate, or analysis.
3. Information
   Programme whose purpose is to impart advice in the widest sense, including meteorological reports and forecasts, consumer affairs, medical help, etc.
4. Sport
   Programme concerned with any aspect of sport.
5. Education
   Programme intended primarily to educate, of which the formal element is fundamental.
6. Drama
   All radio plays and serials.
7. Culture
   Programmes concerned with any aspect of national or regional culture, including religious affairs, philosophy, social science, languadge, theatre, etc.
8. Science
   Programmes about the natural sciences and technology.
9. Varied
   Used for mainly speech-based programmes usually of light-entertaiment nature, not covered by above categories. Examples are : quizzes, panel games, personality interviews, comedy and satire.

b. Music based categories

10. Pop
    Commercial music, which would generally be considered to be of current poplar appeal, often featuring in current or recent record sales charts.
11. Rock
    Contemporary modern music, usually written and performed by young musicians.
12. M.O.R.
    (Middle of the Road Music). Common term to describe music considered to be "easy-listening", as opposed to Pop, Rock or Classical. Music in this category is often but not always, vocal, and usually of short duration (<5min.).

CIRCUIT DESCRIPTION

13. Light classics
    Classical Musical for general, rather than specialist appreciation. Examples of music in this category are instrumental music, and vocal or choral works.
14. Serious classics
    Performamces of major orchestral works, symphonies, chamber music etc., and including Grand Opera.
15. Other music
    Musical styles not fitting into any of the above categories. Particularly used for specialist music, of which Jazz, Rhythm & Blues, Folk, Country, and Reggae are examples.

c. Other

16~30. Not yet assigned.

31. Alarm
    Emergency announcement made under exceptional circumstances to give warning of events causing danger of a general nature.

Note: These definitions can slightly differ between various language versions.

3-3. Operation method

1. The PTY mode is initiated at press of the PROG key. (The PTY mode is canceled at the next press of the PROG key).
2. The language can be displayed by holding the CLK key depressed for 1 second.
   Languages of three countries (English, French, German) can be recalled at press of preset keys 1 to 3.
   The selected language can be established at press of the CLK key. After this, go to step 3) below.
3. Programme type selection: keys 1 to 6, FM key, AM key.
4. PTY search starts at press of ⏮/⏭ key.
5. A station with the selected programme type is tuned (The PTY mode is cancelled in 10 seconds after tuning).
   (Within 10 seconds)
6. PTY search restarts at press of ⏮/⏭ key.
   (In case a station with the selected programme type cannot be searched)
7. The seek operation ends after one cycle (the PTY mode is cancelled).

3-4. Display in PTY mode

1. "NEWS" - Last programme type display.
   PTY dots ON.
2. "ENGLISH" - Last language display.
   PTY dots ON.

4, 6. "NEWS" - Programme type display.
   PTY dots ON.

5. "BBC KENT" - Tuned station PS display.
   PTY dots blinking.
7. "NO PTY" (2 seconds)
   PTY dots OFF.

3-5. EON search method

When there are stations with the selected programme type is found in the stored EON data, they are searched in the order they are stored in the SRAM. If the ⏮/⏭ key is pressed again within 10 seconds after tuning a station with the selected programme type, the next network is searched. After searching based on the EON data has completed, the PTY seek operation occurs,

- The PI code of the last channel is not searched even when it exists in the data.
- After the seek operation is started, the PI code is confirmed unconditionally every time SD is detected (including stations tuned in EON search).
- The language can be selected from English, French and German.

3-6. Modification of TI Search function in '93 model

- Auto TI search is not executed with the TUNER source.
  But, the TI dots blink at the timing of search. (It is executed like before with other sources.)
  Reason: To prevent TI search from occurring in case the station tuned by search in the PTY mode is not a TP station.

3-7. Modification of specifications of SDK model with timer function in '93 model

- Auto SK search is not executed with the TUNER source. However, the SDK dots blink at the timing of search.
  (It is executed like before with other sources.)
  Reason: To prevent auto SK search from occurring in case the station tuned by the timer function is not a SK station.

CIRCUIT DESCRIPTION

4. Security Data Read/Write Specifications

The security data memory is read or written at timings (1) ~ (5) described in the following.

4-1. Code entry method

1. After turning power ON, press and hold the K2I key for more than 3 seconds.
2. Preset keys [1] ~ [4]

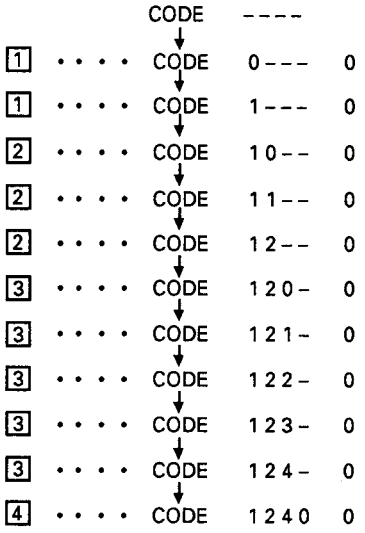

End of entry until the 4th digit.

3. Press and hold the K2I key for more than 3 seconds....End of code entry.

- The security mode is turned ON if the code is OK .... (1)
- Hereafter, the security mode can be turned ON/OFF by holding the K2I key depressed for more than 3 seconds ..... (2)

4-2. Code request

In the security mode, the code request is issued when returning from BACK UP OFF or after reset .. (3)

1. Power ON

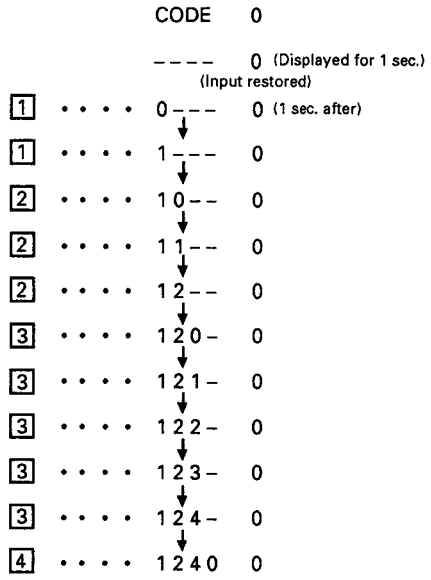

2. After the entry until the 4th digit, press and hold the K2I key for more than 3 seconds to establish.

- When the code is OK....Power ON ..... (4)
- Second time and after : When the code is No Good WAIT (Entry is head for 5 min.) ..... (5)
  5 minutes later....---- (Entry possible)

Hereafter, the hold time after the entered code is No Good changes as shown below.

1st try 0
2nd try 0
3rd try .....5 minutes
4th try .....1 hour
5th try and after .....24 hours
(The try count is displayed on the right.)

(1) The security mode is permitted by the entry of the correct code.
Security mode ON write.
(2) Security mode ON/OFF write.
(3) Security mode data read after reset or when the set is attached (Security code, No Good try count, other data).
(4) 0 is written in No Good try count.
(5) The No Good try count is incremented by +1 and written.

CIRCUIT DESCRIPTION

5. Block Diagram of Microcomputers and Surroundings

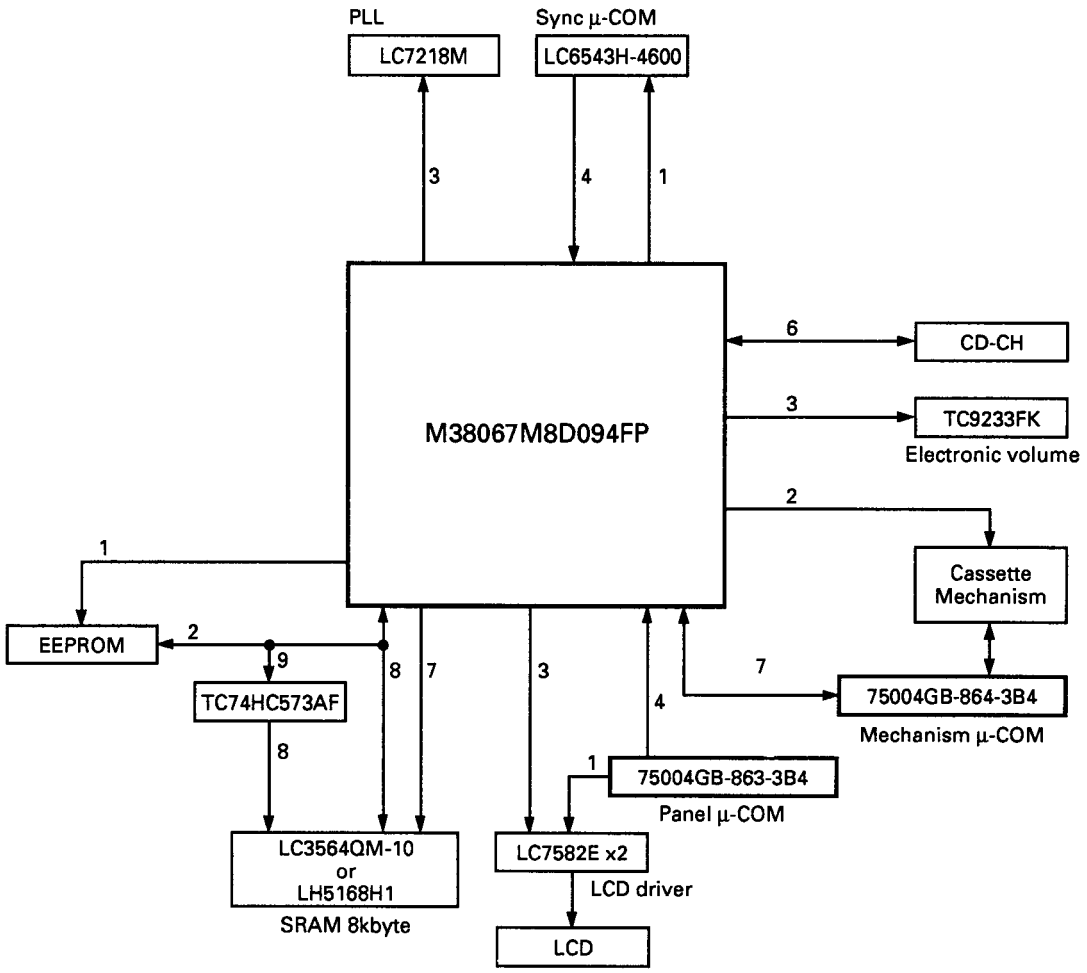

CIRCUIT DESCRIPTION

6. IC1: 75004GB-863-3B4 (X25-7042-71)

Panel Microcomputer

Summary

This microcomputer is mounted in the panel of the '92 model with detachable panel specifications, and used to send the key data, remote control data and rotary control data inputs to the System Controller as command data. The System Controller operates based on the input commands.

6-1. Pin connection

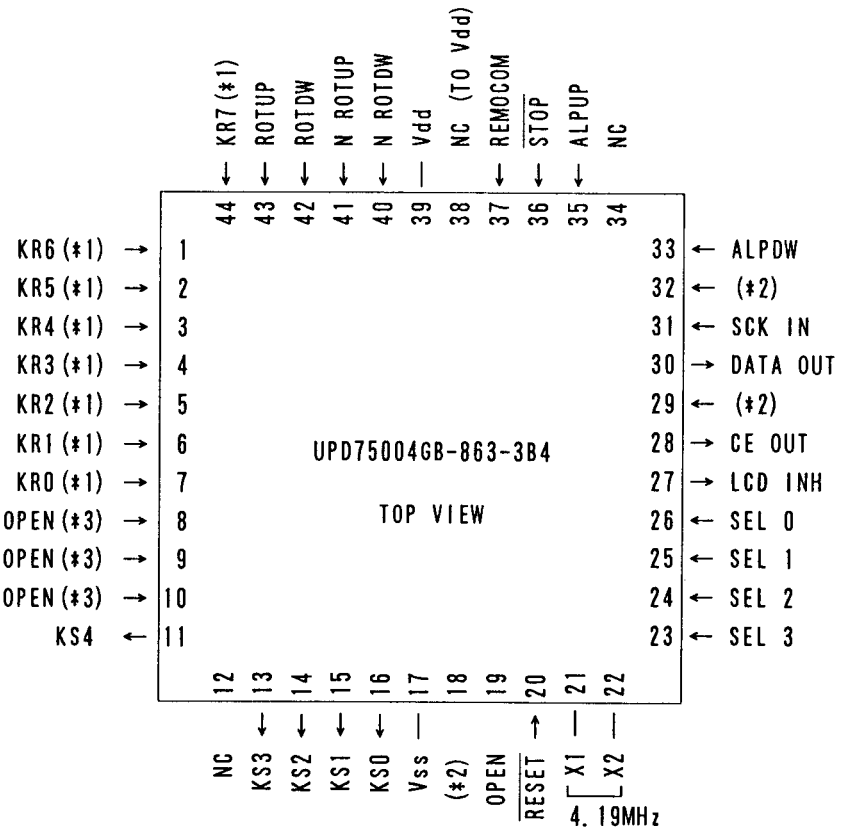

*1:Software pull up
*2:Vss or Vdd
*3:Mask option pull up

CIRCUIT DESCRIPTION

6-2. Terminal Description (All pin numbers refer to flat package types.)

Pin No.	Pin Name	I/O	Description
1~7	KR6~KR0	I	Key Return 6~0 (Active Low). Internally pulled up. Programme selection.
8, 9		I	Not used. Open. Internally pulled up. Mask option.
10		I	Not used. Open. Internally pulled up. Mask option.
11	KS4	O	Key Scan 4 (Active Low). Open drain terminal. (Diode is not necessary).
12	NC	–	No Connection. Open.
13~16	KS3~KS0	O	Key Scan 3~0 (Active Low). Open drain terminal. (Diode is not necessary).
17	Vss	–	μ-COM earth GND.
18	XT1	–	Not used. Connected to Vdd or Vss.
19	XT2	–	Not used. Open.
20	$\overline{\text{RESET}}$	I	Reset input.
21, 22	X1, X2	–	Ceramic oscillator connection terminal. (4.19 MHz)
23~26	SEL3~SEL0	I	Model selection check terminal. (Selected according to pull-up/pull-down).
27	LCDINH	O	LCD driver inhibit terminal.
28	P_CE	O	Key data send request.
29		I	Not used. Connected to Vdd or Vss.
30	P_DATA	O	Key data line.
31	P_CLK	I	Key data clock. (Max. 1 MHz)
32		I	Not used. Connected to Vdd or Vss.
33	NARTDW	I	Input to phase-type, double-edge rotary encoder. (Down)
34	NC	–	No Connection. Open.
35	NARTUP	I	Input to phase-type, double-edge rotary encoder. (Up)
36	$\overline{\text{P\_STOP}}$	I	Stop request (oscillation stop).
37	REMO	I	Remote control data input.
38	NC	–	VDD.
39	VDD	–	Power supply terminal, 5 V.
40	NRTDW	I	Input to phase-type, single-edge rotary encoder. (Down)
41	NRTUP	I	Input to phase-type, single-edge rotary encoder. (Up)
42	RTDW	I	Input to rotation direction pulse input type rotary encoder. (Down)
43	RTUP	I	Input to rotation direction pulse input type rotary encoder. (Up)
44	KR7	I	Key Return 7 (Active Low). Internally pulled up. Programme selection.

NOTE : All of the unused rotary encoder inputs must be pulled down to Vss.

CIRCUIT DESCRIPTION

6-3. Terminals required for control

(1) System controller

Name	I/O	Contents
PANCON	O	Panel power supply terminal. When the panel is attached, supplies power to the panel for initial start-up of the Panel μ-COM. Interlocked with the RESET terminal of the Panel μ-COM.
PANIN	I	Terminal for detecting that the panel is attached on the head unit. PANCON must be turned OFF while the panel is not attached.
P_STOP	O	Stop request to Panel μ-COM. When power or Acc is turned OFF, sets the Panel μ-COM to the stop status in order to reduce the Back Up current. As the Panel μ-COM inhibits the LCD driver at the positive going of this terminal, the LCD display disappears for 1 second when this output is dropped for a moment. Therefore, to cope with possible terminal contact failure, this terminal is provided with a time constant of 20 to 30 ms in the hardware. In case the output from this terminal is dropped, the System Controller should take this time constant in consideration and wait to ensure before restarting.
P_CE	I	Key data send request from Panel μ-COM.
P_CLK	O	Clock output to Panel μ-COM.
P_DATA	I	Key data input from Panel μ-COM.

(2) Panel μ-COM

Name	I/O	Contents
RESET	I	Every time the System Controller turns PANCON output ON, this terminal is reset and the initial start of Panel μ-COM occurs. At this time, the Panel μ-COM checks that the EJECT key is ON and sends test mode codes.
STOP	I	Stop request input, which sets the Panel μ-COM immediately in the stop status. Even in stop status, key codes of certain keys continue to be transferred.
P_CE	O	Key data send request to System Controller.
P_CLK	I	Clock from System Controller.
P_DATA	O	Key data output to System Controller.

CIRCUIT DESCRIPTION

6-4. Key matrix

• Key matrix and specifications of microcomputer for detachable panel

* KRC-1054R/KRC-954R

KEY SCAN / KEY RETURN	KS4 P50 (11pin)	KS3 P43 (13pin)	KS2 P42 (14pin)	KS1 P41 (15pin)	KS0 P40 (16pin)
KR0 (with built-in pull-up R) P60 (7pin)	(SORCE) 90H	★ (AUDIO) 88H	AM ★ 80H	① (AUTO) ★ 78H	PRESET [1] ★ KEY CORD : 70H
KR1 (with built-in pull-up R) P61 (6pin)	EJECT 91H		FM ★ 81H	② (LOCAL) ★ A•ME 79H	PRESET [2] ★ 71H
KR2 (with built-in pull-up R) P62 (5pin)		VOL ATT ★ ■ LOUD 8AH	DOWN ★ (Multiple 82H presses of CLK)	③ (COCK) ★ (Multiple 7AH presses of CLK)	PRESET [3] ★ 72H
KR3 (with built-in pull-up R) P63 (4pin)	PROG 93H	VOL UP ★ *4 (Multiple 8BH presses of CLK)	UP ★ (Multiple presses of CLK)	④ (TI) ★ 7BH	PRESET [4] ★ 73H
KR4 (with built-in pull-up R) P70 (3pin)		VOL DOWN ★ 4 (Multiple 8CH press of VOL)	PRESET [6] ★ 84H	⑤ RDS ★ 7CH	PRESET [5] ★ *1 74H
KR5 (with built-in pull-up R) P71 (2pin)		■ NEGA/POSI ★ ILL 8DH	■ CODE ★ K2I 85H		
KR6 (with built-in pull-up R) P72 (1pin)					
KR7 (with built-in pull-up R) P73 (44pin)					

All pin numbers refer to flat package pins.

* Even while the STOP command to the Panel μ-COM is in effect, when one of the 8 keys assigned to KS4 is pressed to ON, the stop status is released and the key code is sent. This makes the System Controller possible to return from the Power OFF status.

* As for the remote control codes, when a valid custom code is input, the key code is transferred provided that the key code is from 00H to 1FH.

CIRCUIT DESCRIPTION

6-5. Timing chart

(1) Reset by RESET switch on the panel

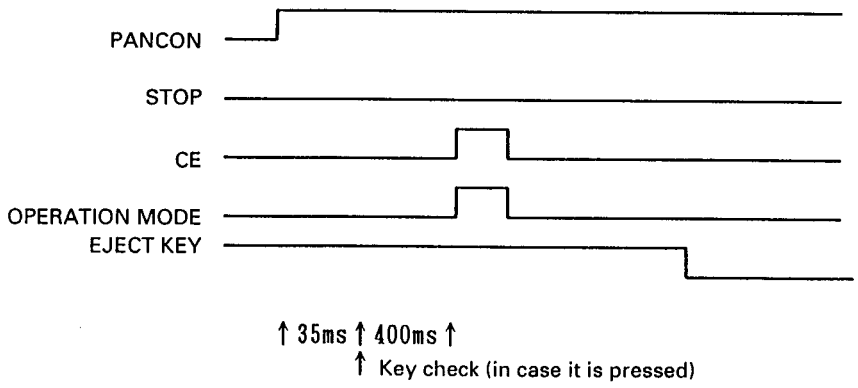

When the Panel μ-COM is reset, Whether the TAPE (Source) or EJECT key is pressed ON or not is checked in the initial processing, and "51H" (TAPE) and "52H" (TAPE) are sent if the key is pressed, and "50H" is sent if it is not.

(2) POWER key pressed ON in stop status

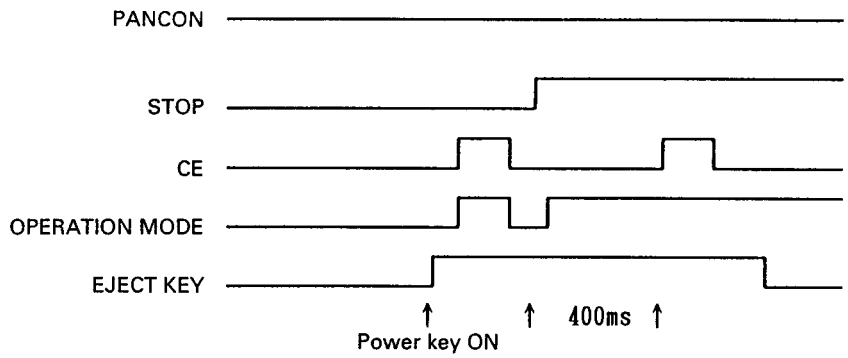

When the POWER key is pressed ON, one of three kinds of key codes shown below are sent. The System Controller executes the power ON operation according to the key code.

I. In case 1 + 5 are also pressed simultaneously
: "61H" Destination change
II. In case 2 + 3 are also pressed simultaneously
: "62H" Not used
III. In case 1 + 3 are also pressed simultaneously
: 63H" DSI
IV. In case TONE is pressed simultaneously
: "64H" Security
V. Other status than I, II, III and IV above
: "60H"

* As the same processing as (3) is executed with the timings marked *, the System Controller should ignore them.

CIRCUIT DESCRIPTION

(3) When Acc is turned ON in case the last power OFF was executed by turning Acc OFF

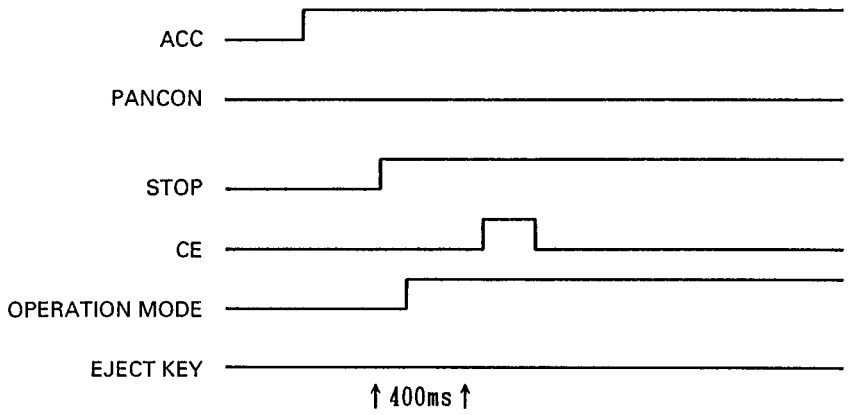

When the POWER key is pressed ON, one of three kinds of key codes shown below are sent. The System Controller executes the power ON operation according to the key code.

I. In case 1 + 5 are also pressed simultaneously
: "61H" Destination change

II. In case 2 + 3 are also pressed simultaneously
: "62H" Not used

III. In case 1 + 3 are also pressed simultaneously
: "63H" DSI

IV. In case TONE is pressed simultaneously
: "64H" Security

V. Other status than I, II, III and IV above
: "60H"

(4) When the panel is attached in case the last power OFF was executed by detaching the panel In this case, the last power ON status is stored in memory and the unit starts with TUNER ON.

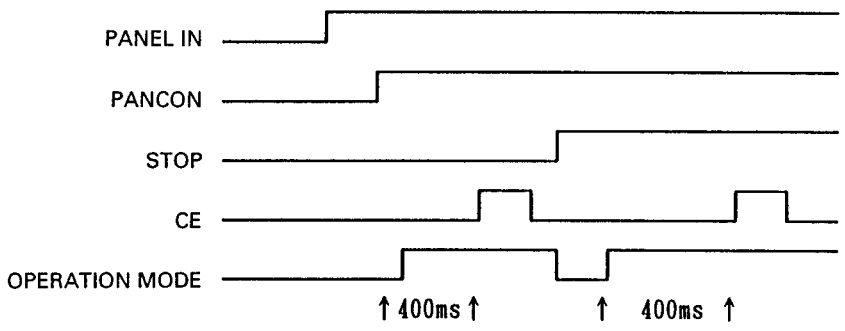

As the Panel μ-COM cannot judge where a start is caused by resetting the unit or attaching the panel, it executes both processing (1) and (3). As a result, the System Controller executes processing (1) (ignoring key commands) first, then executes processing (3) (ignoring key commands).

CIRCUIT DESCRIPTION

(5) When the EJECT, TUNER, TAPE or CD-CH key is pressed in stop status

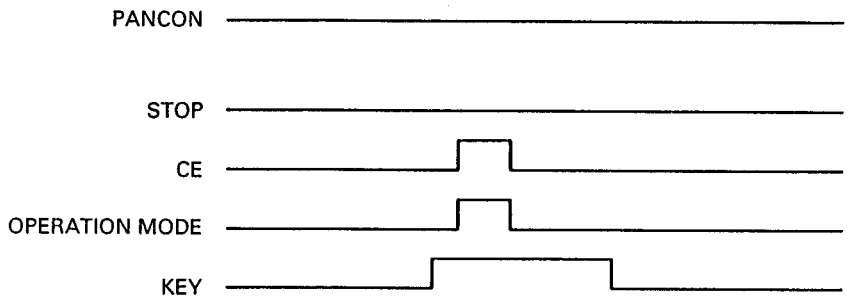

(6) Timing in case of momentary power failure

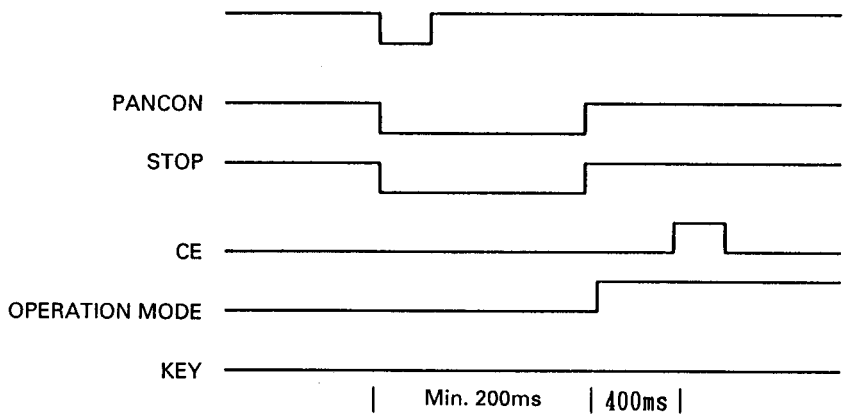

In case of momentary power failure, because the panel power and the STOP terminal are provided with time constants, the status should be held for 200 ms or more after PANCON or STOP is stopped.

6-6. Communication method (3-wire, unidirectional)

The head unit outputs CLOCK (8 bits) at the positive going of REQUEST from the Panel μ-COM. The data the head unit receives at this time becomes the key data.

If the Panel μ-COM does not receive the CLOCK input within 100 ms after it rises REQUEST, it identifies a communication error, turns REQUEST OFF and restart the communication.

While STOP is Low, this restart operation is tried up to 5 times per key input, and after the 5th try the panel returns in the stop status.

The Panel μ-COM uses the serial ports. Data is input at the positive going of CLOCK.

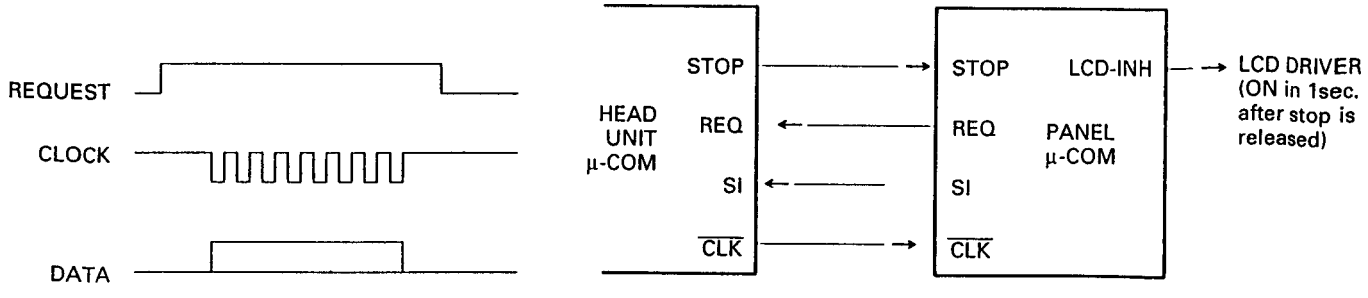

CIRCUIT DESCRIPTION

7. IC17 : 75004GB-864-3B4 (X14-5002-71)

Casette Mechanism Microcomputer

7-1. Pin connection

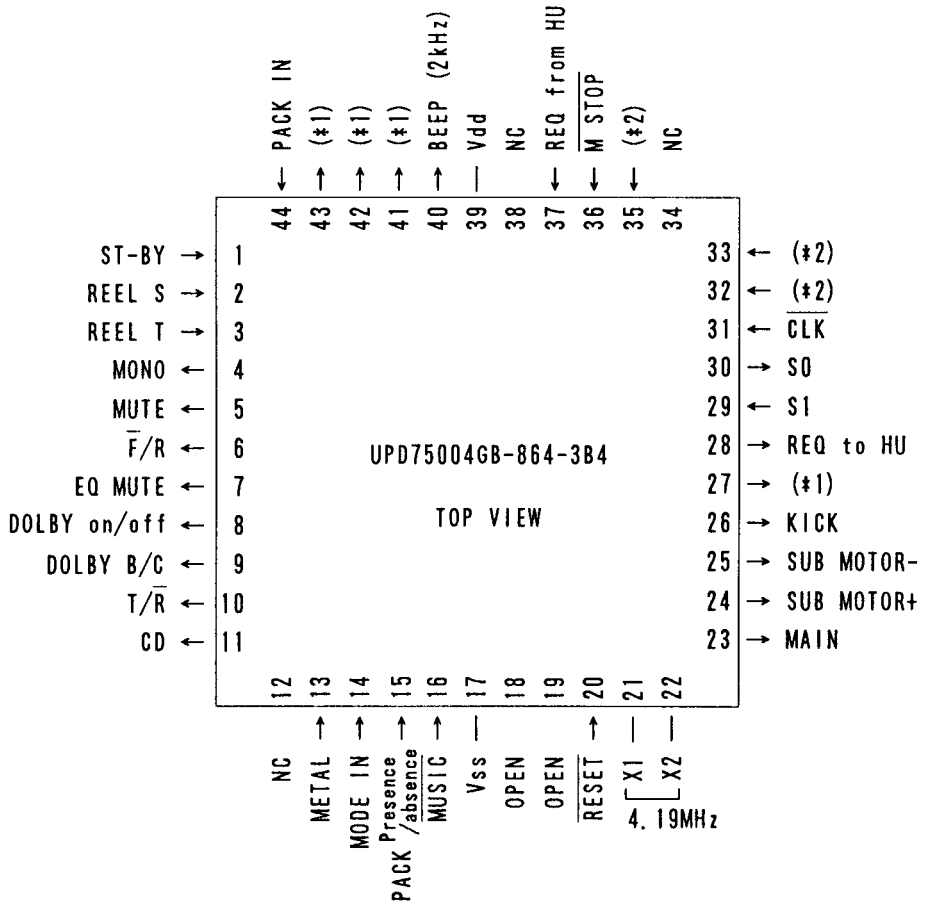

*1:Pull up or pull down
*2:Vss or Vdd

CIRCUIT DESCRIPTION

7-2. Terminal Description (All pin numbers refer to flat package types.)

Pin No.	Pin Name	I/O	Description
1	ST-BY	I	Mechanism Stand-by switch input.
2	REEL S	I	Supply reel pulse input.
3	REEL T	I	Take-up reel pulse input.
4	MONO	O	Forced monaural control output.
5	MUTE	O	Muting output. (Not used)
6	$\overline{\text{FWD/REV}}$	O	Equalizer amplifier FWD/REV switching output.
7	EQ MUTE	O	Equalizer muting output ("H" during play).
8	DOLBY ON/OFF	O	Dolby output. "H" "H" "L"
9	DOLBY B/C	O	Dolby output. ← DOLBY OFF ← DOLBY B ← DOLBY C
			"H" "L" "H"
10	T/$\overline{\text{R}}$	O	Source switching control.
11	CD	O	

	Radio	CD-CH	Tape
10	L	H	H
11	X	L	H

12	NC	–	No Connection. Open.
13	METAL	I	Metal tape detection ("L" = Metal).
14	MODE IN	I	Mode pulse detection ("L" = Mode).
15	PACK DETECT	I	Cassette pack present/absent detection ("H" = Pack detected).
16	$\overline{\text{MUSIC}}$	I	Music detection for music search ("H" = Blank).
17	Vss	–	μ-COM earth GND.
18, 19	XT1, XT2	–	Not used. Open.
20	$\overline{\text{RESET}}$	I	Reset input.
21, 22	X1, X2	–	Ceramic oscillator connection terminal. (4.19 MHz)
23	MAIN	O	Main motor output.
24	SUB+	O	Sub motor forward output.
25	SUB–	O	Sub motor reverse output.
26	KICK	O	Kick output for escape from gear mesh.
27		O	Not used. Pulled up or pulled down.
28	REQ TO HU	O	Communication request to head unit.
29	S1	I	Serial data input line.
30	S0	O	Serial data output line.
31	$\overline{\text{CLK}}$	I	Serial clock input line.
32, 33		I	Not used. Connected to VDD or Vss.
34	NC	–	No Connection. Open.
35		I	Not used. Connected to VDD or Vss.
36	$\overline{\text{M-STOP}}$	I	Stop request. (Oscillation stop)
37	RQ FROM HU	I	Communication request from head unit.
38	NC	–	No Connection. Open.
39	VDD	–	Power supply terminal. 5 V.
40	BEEP	O	Beep output. (2 kHz)
41~43		O	Not used. Pulled up or pulled down.
44	PACK IN	I	PACK-IN switch input.

CIRCUIT DESCRIPTION

8. IC16 : M38067M8D094FP (X14-5002-71)

System Microcomputer

8-1. Pin connection

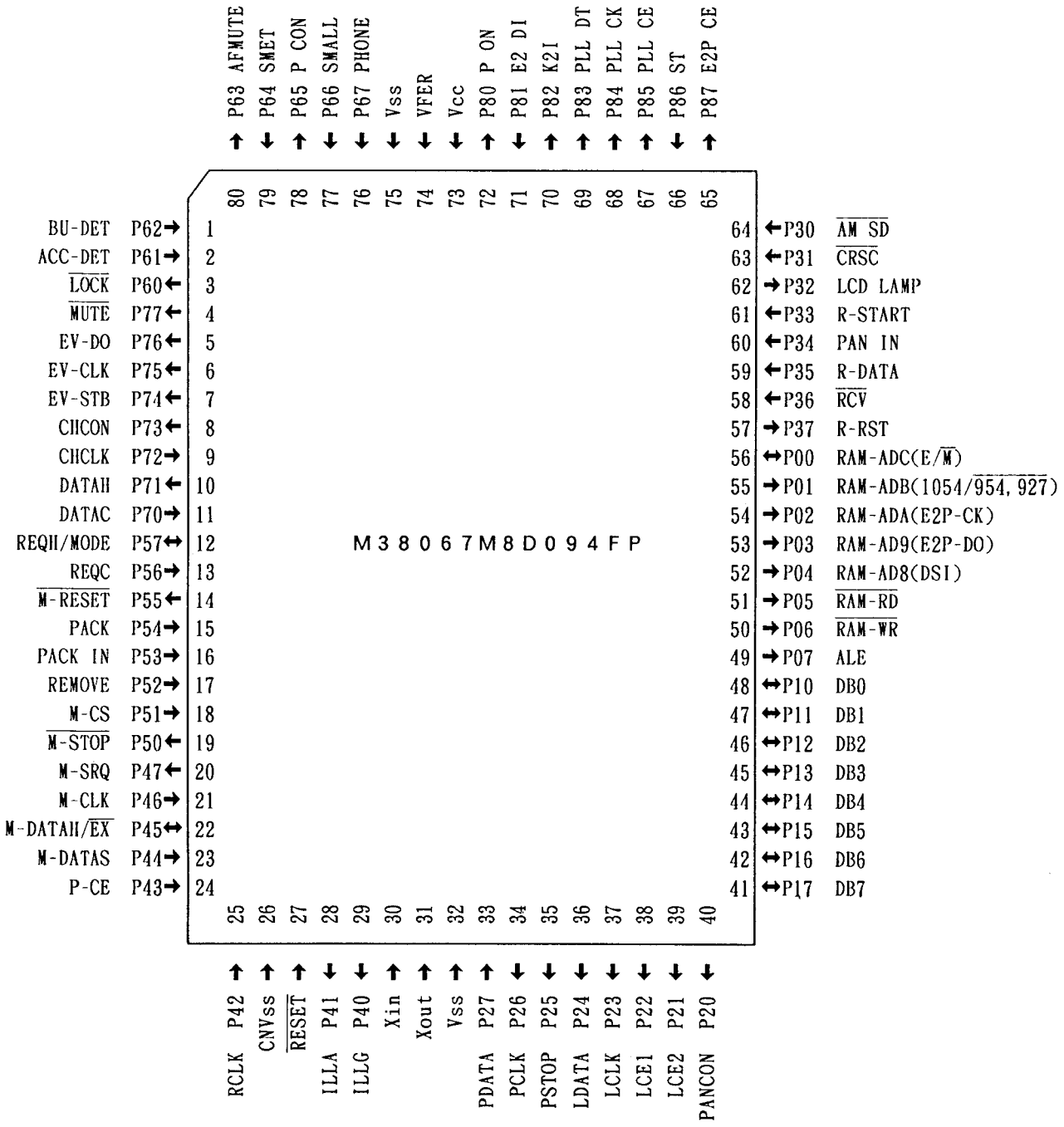

CIRCUIT DESCRIPTION

8-2. Terminal Description

Pin No.	Port No.	Pin Name	I/O	Active	Function	Halt
1	P62	BU-DET	I	L	Momentary power failure detection. Momentary failure = "H".	
2	P61	ACC-DET	I		Acc ON/OFF input. ON = "L".	
3	P60	LOCK	O	L	CK-50 control ON = "L". ("H" when unlocked)	L
4	P77	MUTE	O	L	Muting ON/OFF.	H
5	P76	EV-DO	O		Electronic volume data.	L
6	P75	EV-CLK	O		Electronic volume clock.	L
7	P74	EV-STB	O	H	Electronic volume STB.	L
8	P73	CHCON	O	H	CD-CH control ON/OFF.	L
9	P72	CHCLK	I		CD-CH clock.	
10	P71	DATAH	O		CD-CH output data.	L
11	P70	DATAC	I		CD-CH input data.	
12	P57	REQH/MODE	O/I	L	CD-CH request output. In test mode, K2I mode read.	L
13	P56	REQC	I	L	CD-CH request input.	L
14	P55	M-RESET	O	L	Cassette mechanism controller reset.	H
15	P54	PACK	I		Cassette pack detection. Detected = "L".	
16	P53	PACK IN	I	H	Cassette PACK-IN switch input. PACK IN = "H".	
17	P52	REMOVE	I		Panel detached detection input. Attached = "H".	
18	P51	M-CS	I		Cassette mechanism controller CS.	H
19	P50	M-STOP	O	L	Cassette mechanism controller output stop.	L
20	P47	M-SRQ	O	L	Cassette mechanism controller SRQ.	
21	P46	M-CLK	I	L	Cassette mechanism controller communication clock.	H
22	P45	M-DATAH/ EX RST	I		Output data for communication with cassette mechanism controller. During RESET, "L" for forced reset operation (Memory clear).	H
23	P44	M-DATAS	I	L	Input data for communication with cassette mechanism controller.	
24	P43	P-CE	I		Panel µ-COM Chip Enable.	
25	P42	RCLK	I		Sync µ-COM Clock.	
26	CNVss		I	GND	Chip operation control (single mode "L").	
27	RESET		I	L	Reset.	
28	P41	ILLA	O	H	Illumination - Amber - ON.	L
29	P40	ILLG	O	H	Illumination - Green - ON.	L
30	XIN		I		Oscillator connection.	
31	XOUT		O		Oscillator connection.	
32	Vss				Earth GND.	
33	P27	PDATA	I		Panel µ-COM communication data.	
34	P26	PCLK	O	H	Panel µ-COM communication clock.	
35	P25	PSTOP	O	L	Panel µ-COM oscillation stop.	L
36	P24	LDATA	O		LCD data.	L
37	P23	LCLK	O		LCD clock	L
38	P22	LCE1	O	H	LCD driver CE1.	L
39	P21	LCE2	O	H	LCD driver CE2.	L
40	P20	PANCON	O	H	Panel µ-COM power control (Panel detached = "L").	
41~48	P17~P10	DB7~DB0	I/O		SRAM data bus.	L
49	P07	ALE	O		Latch output.	L
50	P06	RAM-WR	O		SRAM write	L
51	P05	RAM-RD	O		SRAM read	L
52	P04	RAM-AD8	O		SRAM address/When panel is detached, used as the DSI pulse output.	L
53	P03	RAM-AD9	O		SRAM address/EEPROM data output.	L
54	P02	RAM-ADA	O		SRAM address/EEPROM clock.	L
55	P01	RAM-ADB	O		SRAM address/Initial setting (222/224).	L
56	P00	RAM-ADC	O		SRAM address/Initial setting (E/M).	L
57	P37	R-RST	O		Sync µ-COM reset.	L
58	P36	RCV	I		Sync detection.	
59	P35	R-DATA	I		Sync µ-COM data.	
60	P34	PAN IN	I		Panel detection. Panel detached = "L".	

CIRCUIT DESCRIPTION

Pin No.	Port No.	Pin Name	I/O	Active	Function	Halt
61	P33	R-START	I		Sync μ-COM start data.	
62	P32	LCD LAMP	O	H	LCD lamp control.	L
63	P31	$\overline{\text{CRSC}}$	I		Noise detection. Noise detected = "L".	
64	P30	$\overline{\text{AMSD}}$	I		FM: Band muting detection/AM: SD station detected = "L".	
65	P87	E2P-CE	O	L	EEPROM CE.	L
66	P86	ST	I		$\overline{\text{Stereo}}$/Mono.	
67	P85	PLL-CE	O		PLL CE.	L
68	P84	PLL-CLK	O		PLL clock.	L
69	P83	PLL-DT	O		PLL data.	L
70	P82	K2I	O	H	K2I control. "H" = Forced Wide (K2I OFF). "L" = Auto (K2I ON).	L
71	P81	E2 DI	I		EEPROM data input.	
72	P80	P-ON	O		Peripheral power control.	L
73	Vcc				Power supply.	
74	VREF		I		A/D conversion reference voltage.	
75	Vss				Earth GND.	
76	P67	PHONE	I	L	EX muting.	
77	P66	SMALL	I	L	Small input.	
78	P65	P-CON	O	H	P-CON output.	L
79	P64	S-MET	I		FM field strength input.	
80	P63	AF-MUTE	O	L	Quick muting for AF search SD.	H

CIRCUIT DESCRIPTION

9. IC1: LC7218M (X14-5002-71)

PLL

9-1. Pin connection

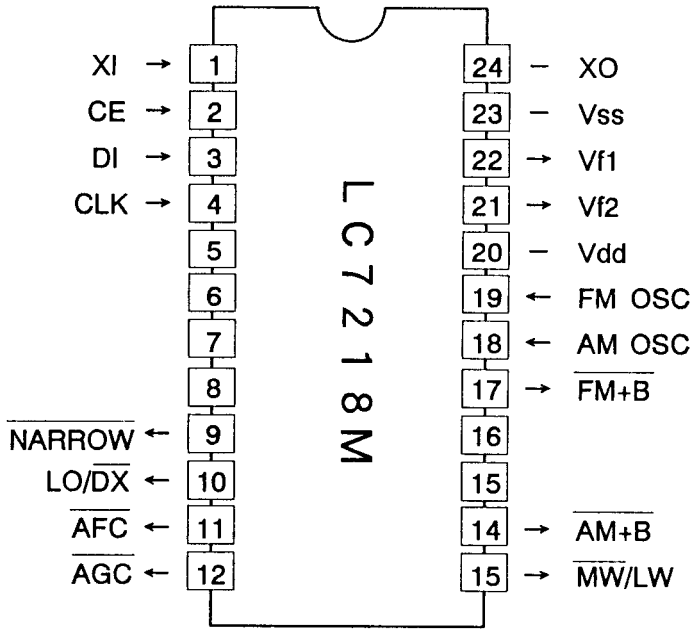

9-2. Terminal Description

Pin No.	Port No.	Pin Name	I/O	Active	Function
7	–		I		Not used (to earth GND).
8	–		I		Not used (to earth GND).
9	–	NARROW	O	–	"L" in Forced Narrow mode (test mode).
10		LO/DX	O	–	LOCAL/DX switching.
11		AFC	O	L	Automatic frequency control (FM).
12		AGC	O	L	Automatic gain control (AM).
13		MW/LW	O	L	MW/LW switching.
14		AM (+B)	O	L	AM+B
17		FM (+B)	O	L	FM+B

MECHANISM OPERATION DESCRIPTION

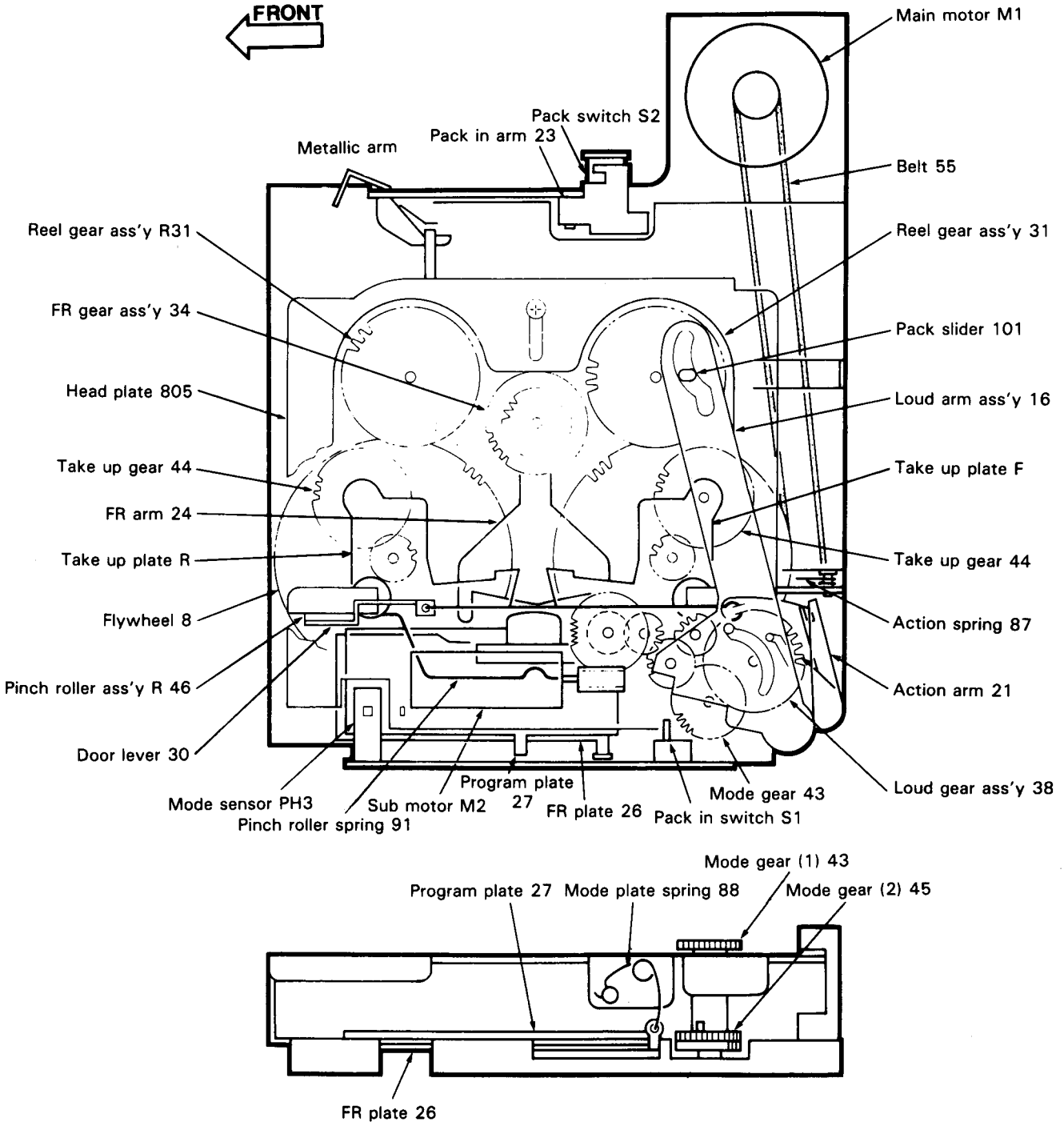

Fig. 1

KRC-954R

MECHANISM OPERATION DESCRIPTION

Mechanism operation modes

Each mode undergoes the following sequence:

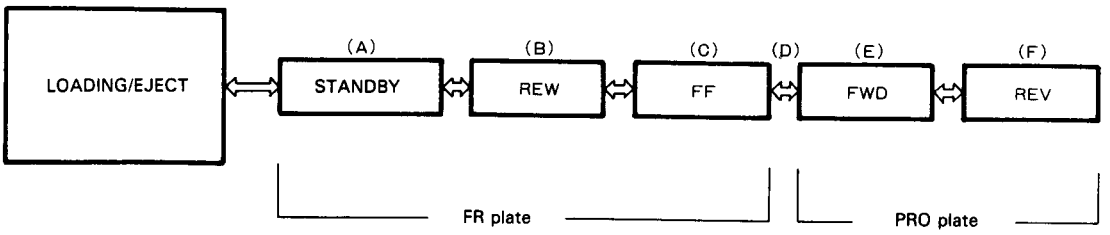

Each mode is determined by the positions of the FR and PRO plates.

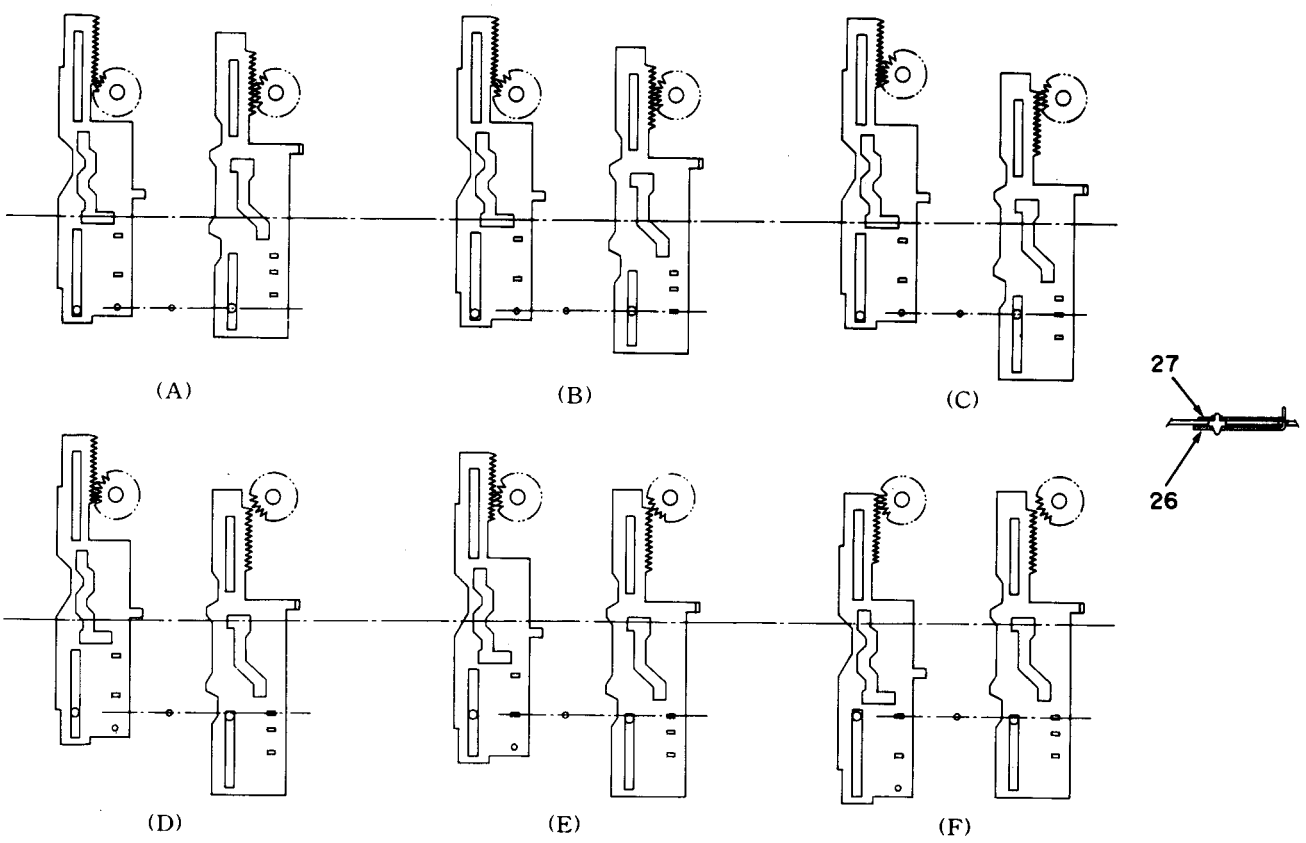

MECHANISM OPERATION DESCRIPTION

1. Loading

When the cassette tape is pushed in ❶, the loading arm (16) moves via the pack slider (101)... ❷. Thus, the pack-in switch (S1) detects this... ❸, and the sub motor (M2) makes normal rotation... ❹.

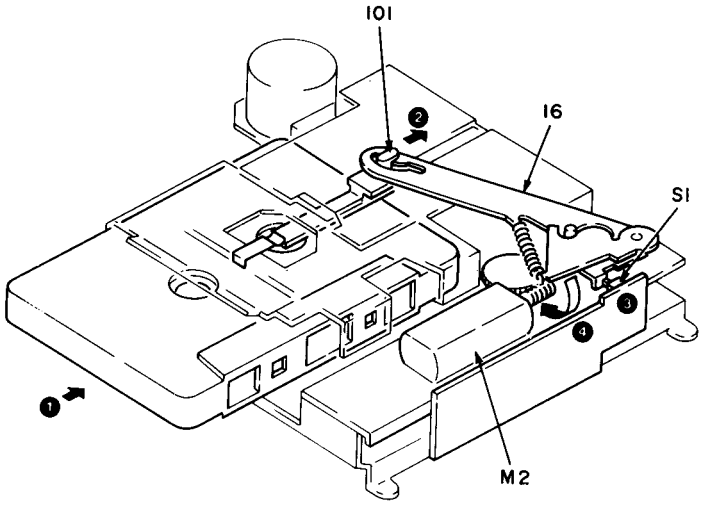

The rotation of the sub motor (M2) causes the load gear (38) to rotate by way of the idle gear... ❺.
The load gear (38) provides the rotation of the loading arm (16) by its pin... ❻, to load in the cassette tape.

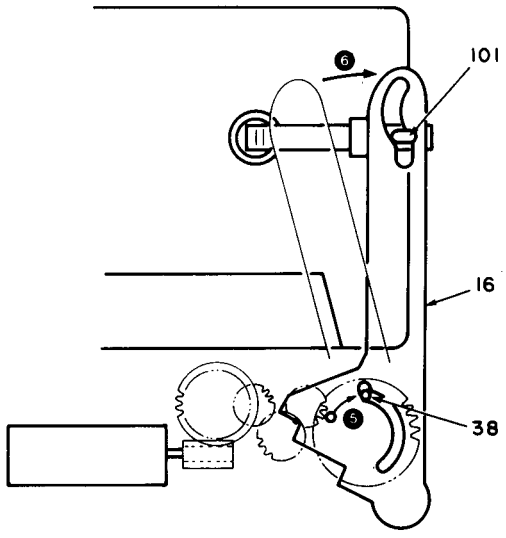

2. PACK DOWN

When the load gear (38) further rotates ❼, the action arm (21) also rotates ❽ to lower the action plate (14)... ❿, by way of the action plate spring (87)... ❾.

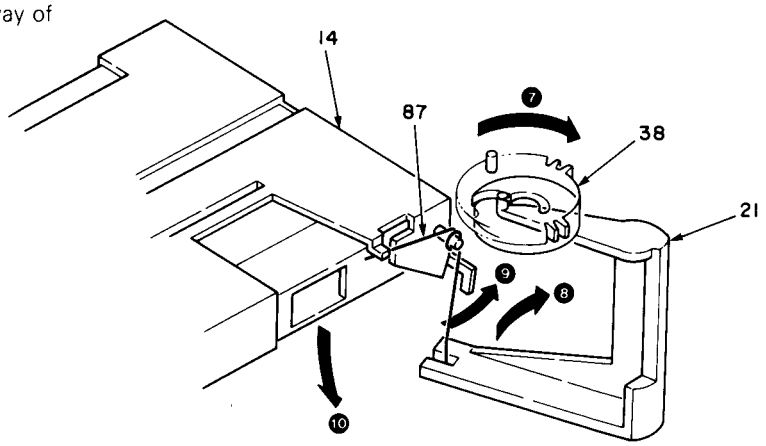

MECHANISM OPERATION DESCRIPTION

3. Change from load gear to mode gear

When the load gear (38) further more rotates ⓫, the boss under it pushes against the boss of the mode gear (43)... ⓬, so that the mode gear (43) rotates after the shift of its non-toothed section... ⓭.
Thus, the load gear (38) stops rotation on account of its non-toothed section coming.

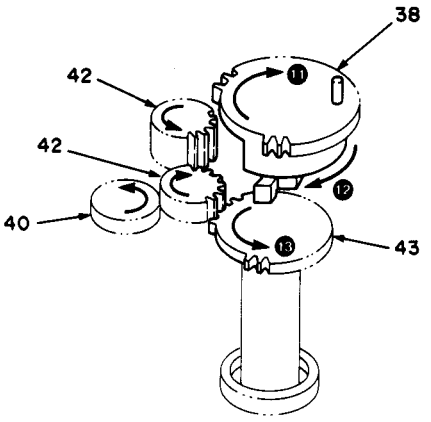

4. REW

When the mode gear (43) rotates ⓮, the FR plate (26) under it moves ⓯. The cam of the FR plate (26) works to rotate the FR arm (24)... ⓰.

Further, the FR arm (24) moves to transmit the rotation of the flywheel (8) to the reel gear (31)... ⓱.
At this time, a slot (REW hole) of the FR plate (26) is detected by the mode sensor (PH3)... ⓲, to stop the rotation of the sub motor.

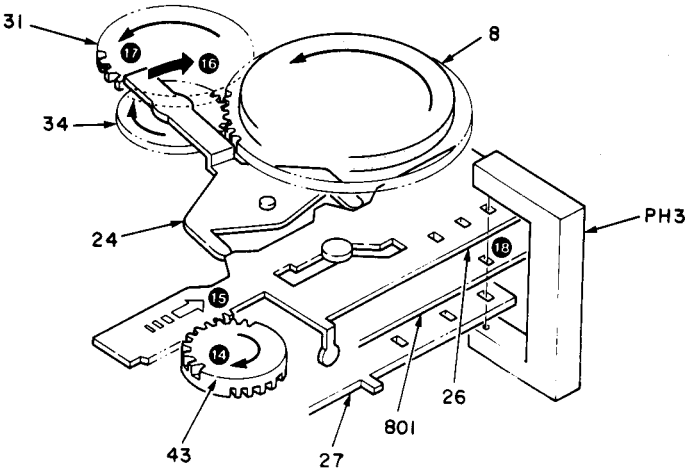

(B)

For REW or FF, due to the groove of the FR plate (26)... ⓳, the head plate (805) advances ⓴ so that the head moves to a position at which T-ADV is feasible.

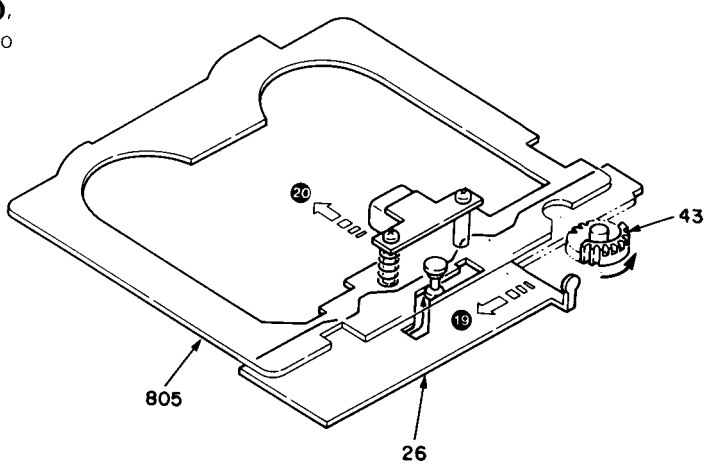

MECHANISM OPERATION DESCRIPTION

5. FF

When the sub motor further rotates, the cam of the FR plate (26) moves ㉑ so that the FR arm (24) is rotated in the reverse direction... ㉒. Thus, a slot (FF hole) of the FR plate (26) is detected by the mode sensor (PH3) to stop the rotation of the sub motor.

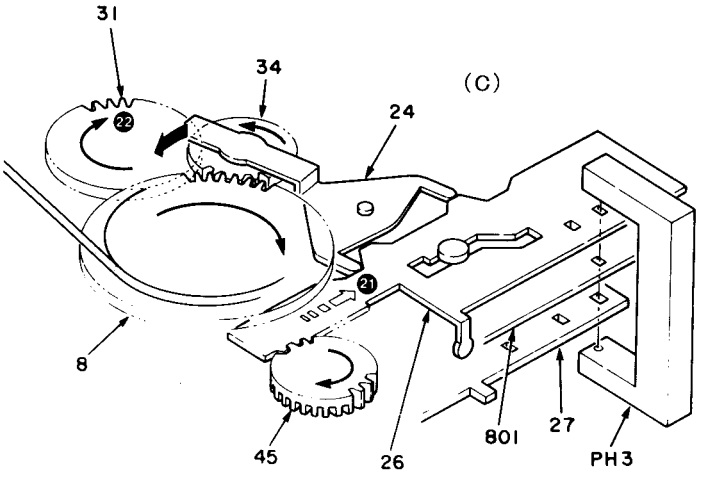

6. Change from FR plate to PRO plate

When the sub motor further more rotates, the knob of the FR plate (26) hits against the knob of the PRO plate (27)... ㉓, so that the PRO plate (27) moves.

Thus, the rack of the PRO plate (27) enters into engagement with the mode gear... ㉔. Then, the rack of the FR plate (26) is disengaged from the mode gear because of its non-toothed section coming... ㉕. The mode plate spring (88) assists in this operation.

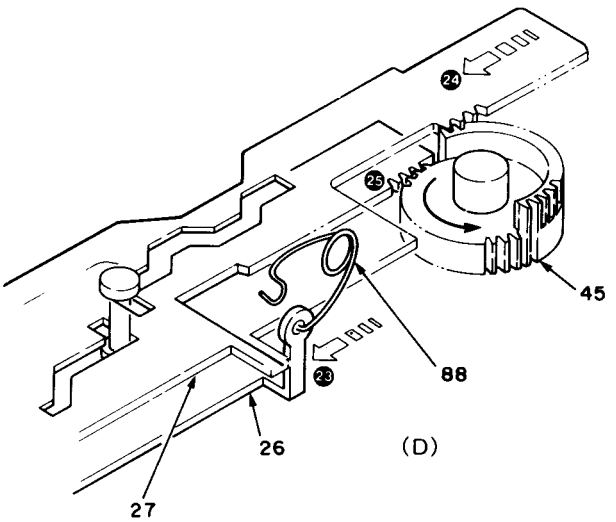

7. FWD PLAY

When the PRO plate (27) moves ㉕, the takeup plate F is rotated by the cam of the PRO plate (27) and the takeup gear (44) engages with the reel assy (31)... ㉖. The rotation of the flywheel (8) is transmitted to the reel assy (31) by way of the takeup gear (44)... ㉗. Thus, a slot (FWD hole) of the PRO plate (27) is detected by the mode sensor (PH3) to stop the rotation of the sub motor.

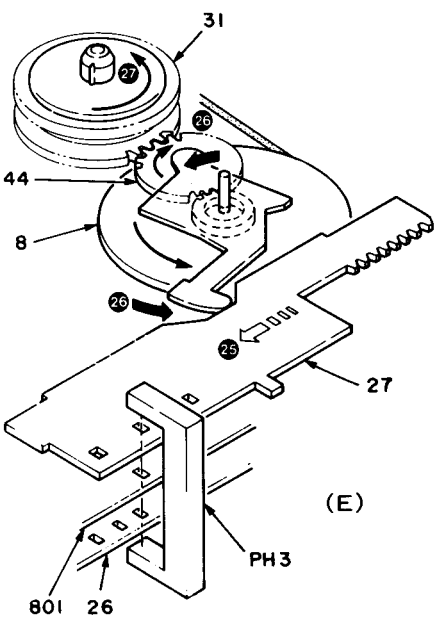

KRC-954R

MECHANISM OPERATION DESCRIPTION

The groove of the PRO plate (27) serves to advance the head plate (805)... ㉘, to move the head and the pinch roller (48) to their FWD PLAY position. The pinch roller (48) is contacted to the capstan (8) by pressure due to the shift to the takeup plate and the force of the pinch roller spring... ㉙.

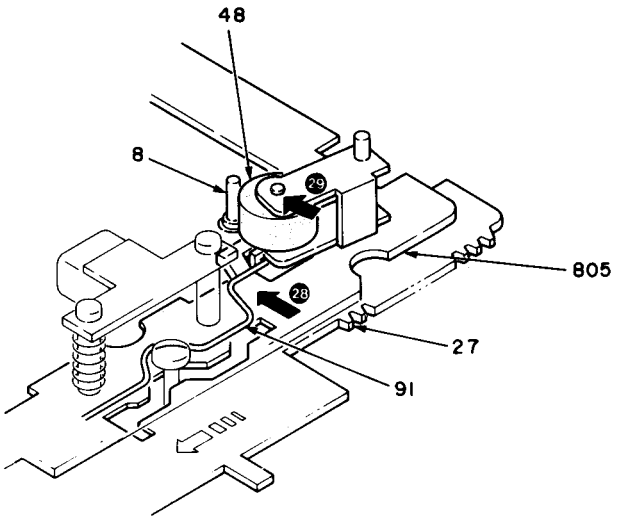

8. REV PLAY

When the PRO plate (27) further moves, the takeup plate F returns by the cam of the PRO plate (27)... ㉛, and the takeup plate R rotates ㉜.
The rotation of the flywheel is transmitted to the reel assy (31) by way of the takeup gear (44)... ㉝.
Thus, a slot (REV hole) of the PRO plate (27) is detected by the mode sensor (PH3) to stop the rotation of the sub motor.

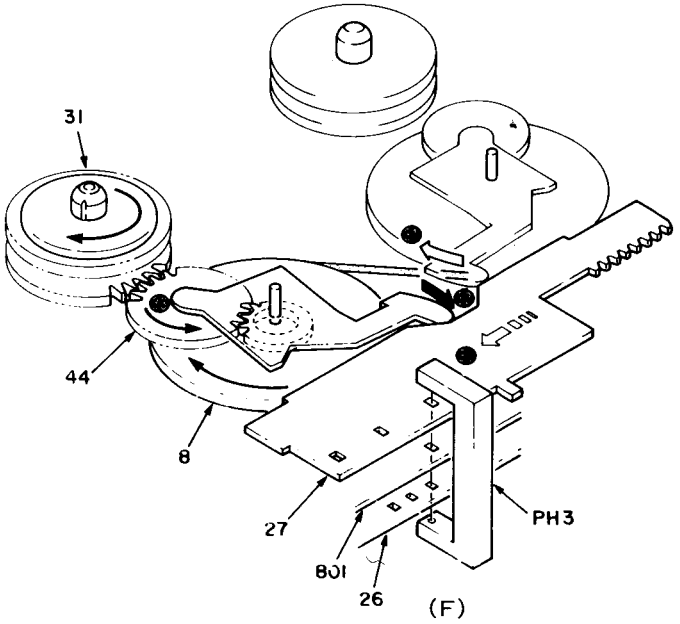

9. STANDBY (PAUSE)

From a given mode, when the head plate (805) regresses due to the reverse rotation of the sub motor rotates, when the pause switches (S3) acts (''L'' to ''H'') to stop the rotation of the sub motor, the pause mode is entered.

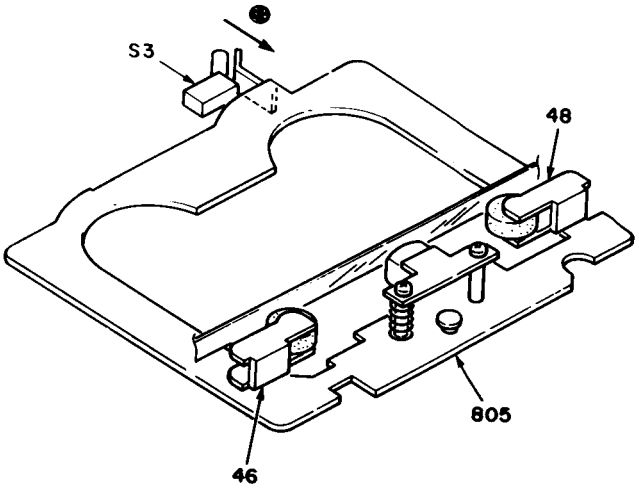

MECHANISM OPERATION DESCRIPTION

10. EJECT

When the sub motor is reversely rotated, an operation reverse to the loading operation is performed to eject the cassette tape.

11. SHUTTER DOOR

For loading or eject, the door arm (28) is actuated by the pin of the load gear (38). The door arm (28) moves the door lever (30) forwards or backwards to open or close the cassette door (lid).

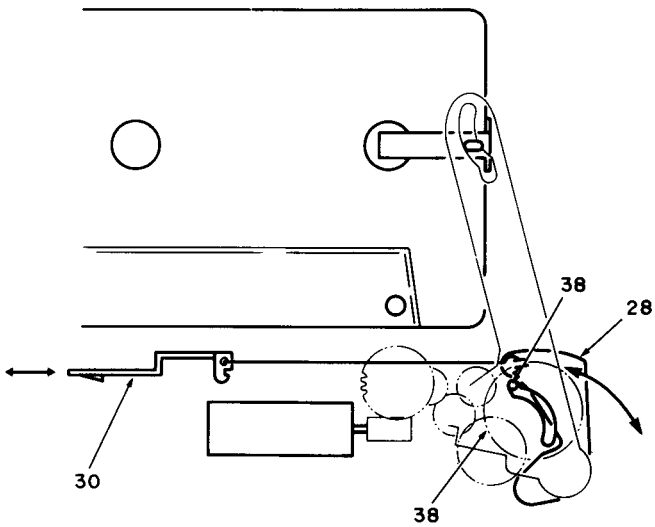

12. AUTO REVERSE

The tape end is detected by the sensor which senses the reel rotation.

13. AUTO METAL

The auto metal switch (S4) detects the high position hole of the cassette tape when the head plate (805) is advancing.

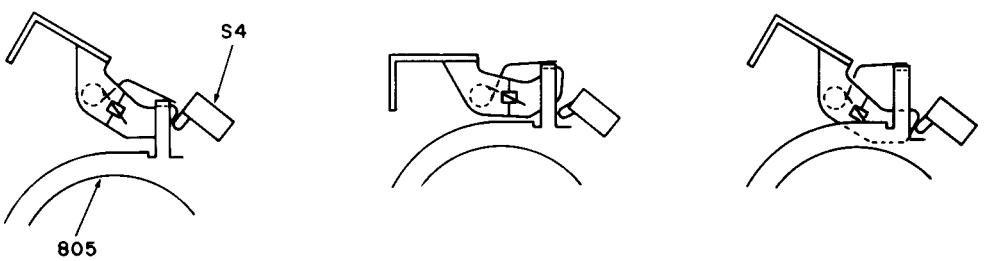

KRC-954R

AJUSTMENT

Set the controls and switches as follows.
BALANCE :center position BASS :center position LOUD :OFF LOCAL :OFF DOLBY NR :OFF
FADER :center position TREBLE :center position T • ADV :OFF AUTO :OFF

No	ITEM	INPUT SETTINGS	OUTPUT SETTINGS	TUNER (RECEIVER) SETTINGS	ALIGNMENT POINTS	ALIGN FOR	FIG.
FM SECTION							
1	DISCRI-MINATOR	(A) 98.1MHz 0dev 60dBμ(ANT input)	Connect a DC voltmeter to TP1 (X14-B/5)	FM 98.1MHz	T1 (X14-B/5)	0V	(a)
2	SEPARATION (WIDE)	(C) 98.1MHz 1kHz,±40kHz dev Pilot:±6.0kHz dev Selector:L or R 60dBμ(ANT input)	(B)	Test mode: (*3) Forced Wide FM 98.1MHz	VR13 (X14-B/5)	Adjust it so that the crosstalk from L to R and R to L become minimum.	
3	ANRC (WIDE)	(C) 98.1MHz 1kHz,±40kHz dev Pilot:±6.0kHz dev Selector:L or R 35dBμ(ANT input)	(B)	Test mode: (*3) Forced Wide FM 98.1MHz	VR15 (X14-B/5)	Separation 10dB	
	After 3 adjustment, measure DC voltage at 35 dBμ at TP2 (X14-B/5) and record. →[V35]						(b)
4	SOFT MUTE LEVEL	(A) 98.1MHz 1kHz,±40kHz dev 60dBμ→No input	(B)	Test mode: (*3) Forced Wide FM 98.1MHz	VR11 (X14-B/5)	Output Noise level -25dBμ (When not add sny signal to ANT terminal)	
5	MUTE SENSITIVITY LEVEL	(A) 98.1MHz 0 dev 5 dBμ(ANT input)	–	Test mode: (*3) Forced Wide FM 98.1MHz	VR14 (X14-B/5)	LCD "PAUSE" ON → OFF	
6	SEEK STOP SENSITIVIT LEVEL	(A) 98.1MHz 0 dev 20dBμ(ANT input)	–	Test mode: (*3) Forced Wide FM 98.1MHz	VR2 (X14-A/5)	LCD "DQB" OFF → ON	
7	NARROW GAIN	(C) 98.1MHz 1kHz,±40kHz dev Pilot:±6.0kHz dev Selector:L or R 35dBμ(ANT input)	Connect a DC voltmeter to TP2 (X14-B/5)	Test mode: (*4) Forced Narrow FM 98.1MHz	VR1 (X14-A/5)	Same as [V35] easured in Wide.	(b)
8	SEPARATION (NARROW)	(C) 98.1MHz 1kHz,±40kHz dev Pilot:±6.0kHz dev Selector:L or R 60dBμ(ANT input)	(B)	Test mode: (*4) Forced Narrow FM 98.1MHz	VR12 (X14-B/5)	Adjust it so that the crosstalk from L to R and R to L become minimum.	
MW SECTION							
(1)	SEEK STOP SENSITIVIT LEVEL	(D) 999kHz 0% mod 35dBμ(ANT input)	–	Test mode: (*5) AM mode MW 999kHz	VR3 (X14-A/5)	LCD "DQC" OFF → ON	
CASSETTE DECK SECTION							
[1]	PLAYBACK LEVEL	MTT-150	Connect an AC voltmeter to TP1(X09-B/2)	TAPE PLAY	VR1(L) VR2(R) (X09-B/2)	300mV	(c)

* Test mode

- With power OFF, press and hold ([EJECT] + [▶▶|]) while press [RST] SW.
- LCD ON mode starts. Be careful because VRs are maximum at this moment!
- Press [SOURCE] key to select TUNER (FM).
- Press [K2I] key. "K2I" goes OFF, "MTL" goes ON => Forced Wide. *3
- Press [ATT] key,. "ATT" goes ON, "MTL" goes OFF => Forced Narrow. *4
- Press [AM] key to select TUNER (AM). *5
- Press [RST] SW to release test mode.

ABGLEICH

ie Regler und Knöpfe wire folgt einstellen.

BALANCE :Mittelage BASS :Mittelage LOUD :OFF LOCAL :OFF DOLBY NR :OFF
FADER :Mittelage TREBLE :Mittelage T • ADV :OFF AUTO :OFF

NR	GEGENSTAND	EINGANGS EINSTELLUNG	AUSGANGS EINSTELLUNG	TUNER (RECEIVER) EINSTELLUNG	ABGLEICH PUNKTE	ABGLEICHEN FUR	ABB.
UKW-ABTEILUNG							
1	DISKRI-MINATOR	(A) 98.1MHz 0 Hub 60dBμ(ANT-Eingang)	Den Gleichstrom Voltmeter zwischen den beiden Stiften von TP1 anschließen (X14-B/5)	FM 98.1MHz	T1 (X14-B/5)	0V	(a)
2	STEREO KANAL TRENNUNG (Weit)	(C) 98.1MHz 1kHZ,±40kHz Hub Pilot:±6.0kHz Hub Wahler : L or R 60dBμ(ANT-Eingang)	(B)	Testmodus : (*3) Weit erzwungen. FM 98.1MHz	VR13 (X14-B/5)	So einstellen, daß das Übersprechen von L auf R und von R auf L minimal wird.	
3	ANRC (Weit)	(C) 98.1MHz 1kHZ,±40kHz Hub Pilot:±6.0kHz Hub Wahler : L or R 35dBμ(ANT-Eingang)	(B)	Testmodus : (*3) Weit erzwungen. FM 98.1MHz	VR15 (X14-B/5)	Trennung 10dB	
	Nach der 3 Einstellung die Gleichspannung bei 35 dBμ an TP2 (x14-B/5) messen. → V35						(b)
4	Weiche Dämpfung PEGEL	(A) 98.1MHz 1kHZ,±40kHz Hub 60dBμ→No Eingang	(B)	Testmodus : (*3) Weit erzwungen. FM 98.1MHz	VR11 (X14-B/5)	Ausgangsrauschpeqel -25dB (Wenn nicht, ein beliebiges Signal an den ANT-Anschlußanlegen)	
5	Dämpfung-sempfindlichkeit PEGEL	(A) 98.1MHz 0 Hub 5dBμ(ANT-Eingang)	–	Testmodus : (*3) Weit erzwungen. FM : 98.1MHz	VR14 (X14-B/5)	LCD "PAUSE" EIN → AUS	
6	SUCHEN HALT PEGEL	(A) 98.1MHz 0 Hub 20dBμ(ANT-Eingang)	–	Testmodus : (*3) Weit erzwungen. FM : 98.1MHz	VR2 (X14-A/5)	LCD "DCB" AUS → EIN	
7	SCHMAL-VERSTÄRKUNG	(C) 98.1MHz 1kHZ,±40kHz Hub Pilot:±6.0kHz Hub Wahler : L or R 35dBμ(ANT-Eingang)	Den Gleichstrom Voltmeter zwischen den beiden Stiften von TP2 anschließen (X14-B/5)	Testmodus : (*4) Schmal erzwungen. FM 98.1MHz	VR1 (X14-A/5)	Gleich wie V35 gemessen in Weit.	(b)
8	STEREO KANAL TRENNUNG (Schmal)	(C) 98.1MHz 1kHZ,±40kHz Hub Pilot:±6.0kHz Hub Wahler : L or R 60dBμ(ANT-Eingang)	(B)	Testmodus : (*4) Schmal erzwungen. FM 98.1MHz	VR12 (X14-B/5)	So einstellen, daß das Übersprechen von L auf R und von R auf L minimal wird.	
MW-ABTEILUNG							
(1)	SUCHEN HALT PEGEL	(D) 999kHz 400Hz,30% mod 35dBμ(ANT-Eingang)	–	Testmodus : (*5) AM modus MW 999kHz	VR3 (X14-A/5)	LCD "DCC" AUS → EIN	
CASSETTEN-DECK-ABTEILUNG							
[1]	WIDERGABE PEGEL	MTT-150	Einen wechsel-spannungsmesser zwischen zu TP1 anschließen. (X09-B/2)	Bandwiedergabe	VR1(L) VR2(R) (X09-B/2)	300mV	(c)

Testmodus

- Bei ausgeschalteter Spannungsversorgung (EJECT + ▶▶|) gedrückt halten und RST SW drücken.
- Der LCD ON-Modus beginnt. Vorsicht, weil die Regelwiderstände zu diesem Zeitpunkt maximal sind!
- Die SOURCE-Taste drücken, um TUNER (FM) zu wählen.
- Die K2I-Taste drücken. "K2I" erlischt, "MTL" leuchtet => Weit erzwungen. *3
- Die ATT-Taste drücken. "ATT" leuchtet, "MTL" erlischt => Schmal erzwungen. *4
- Die AM-Taste drücken, um TUNER (AM) zu wählen. *5
- Zum Verlassen des Testmodus RST SW .drücken.

AJUSTMENT

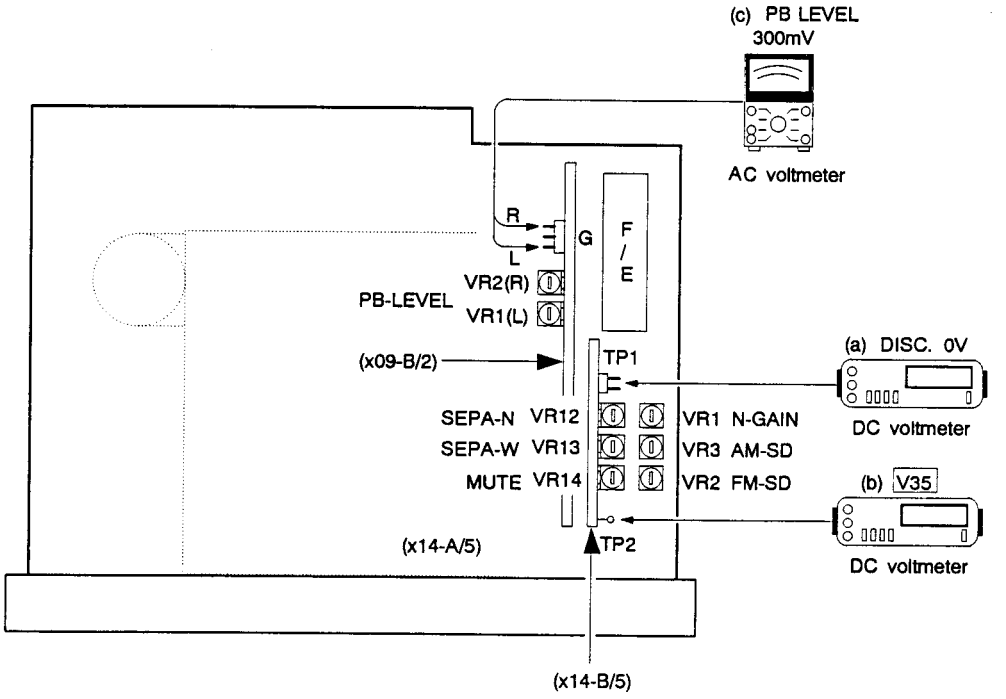

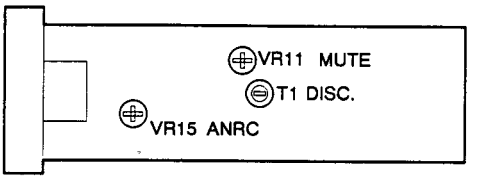

(RIGHT SIDE VIEW)

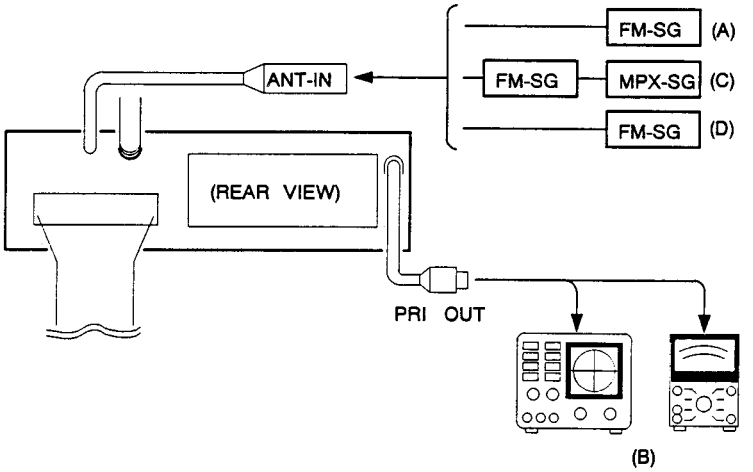

(B)

PC BOARD (COMPONENT SIDE VIEW)

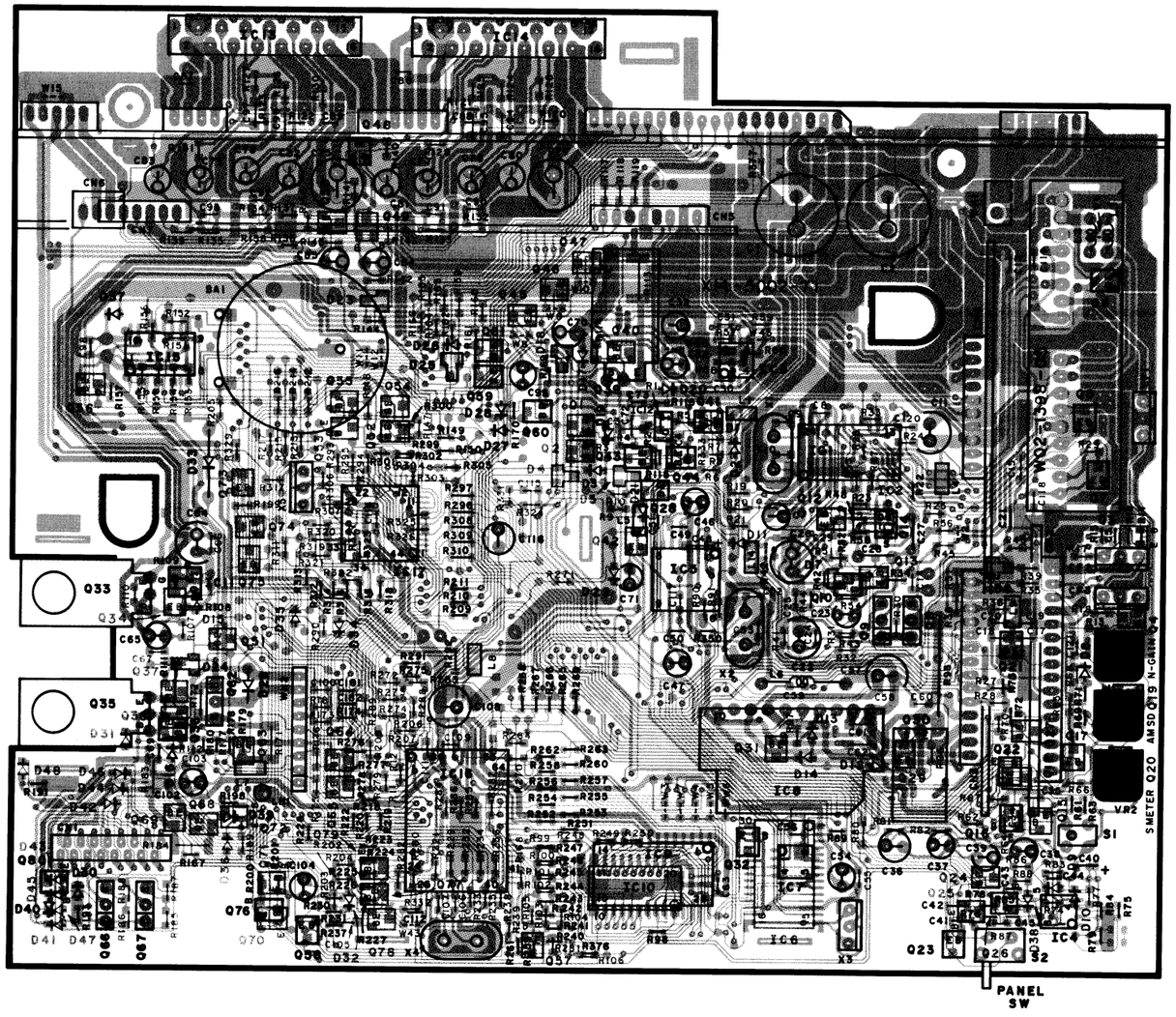

SYNTHESIZER UNIT
(X14-5002-71)

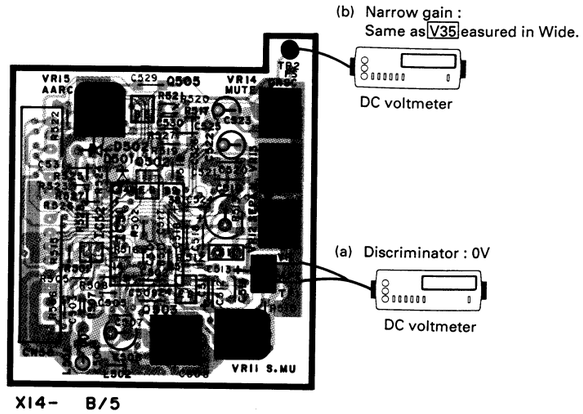

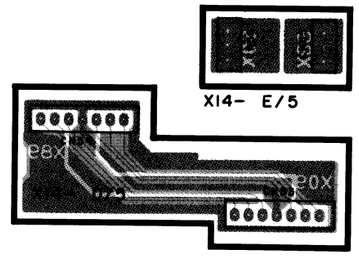

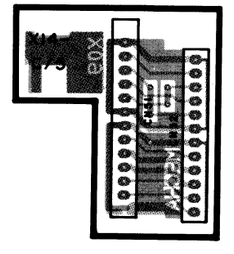

X14-5002-71

Ref. No.		Address
IC	Q	
1		3E
2		4E
3		3E
4		5F
5		4E
6		5E
7		5E
8		5E
9		5D
10		5D
11		4B
12		3E
13		2C
14		2D
15		3B
16		5D
17		4C
51		3H
52		3H
	1	3D
	2	3D
	3	4F
	4	4F
	5	3F
	6	3F
	7	3F
	8	4F
	9	4F
	10	4E
	12	4E
	13	4E
	14	4E
	15	5F
	16	5F
	17	5F
	18	5F
	19	4F
	20	5F
	21	4F
	22	5F
	23	5F
	24	5F
	25	5F
	26	5F
	27	4F
	28	3D
	29	5F
	30	5F

Ref. No.		Address
IC	Q	
	31	5E
	32	5E
	33	4B
	34	4B
	35	4B
	36	5B
	37	4B
	38	4B
	39	3D
	40	3D
	41	3E
	42	4D
	43	3D
	44	3E
	48	2C
	49	2C
	50	2C
	51	4C
	52	3C
	53	3C
	54	3C
	55	3C
	56	3B
	57	5D
	58	5C
	59	3D
	60	3D
	61	3D
	62	4C
	63	5C
	64	5C
	65	5C
	66	5B
	67	5B
	68	5C
	69	5B
	70	5C
	71	5C
	72	5C
	73	4C
	74	4C
	75	4C
	76	5C
	77	5C
	80	5B
	502	2H
	503	3H
	505	2H

X25-7042-71

Ref. No.		Address
IC	Q	
1		6E
2		7E
3		6E
4		7D
5		7C
	1	6F
	2	6F

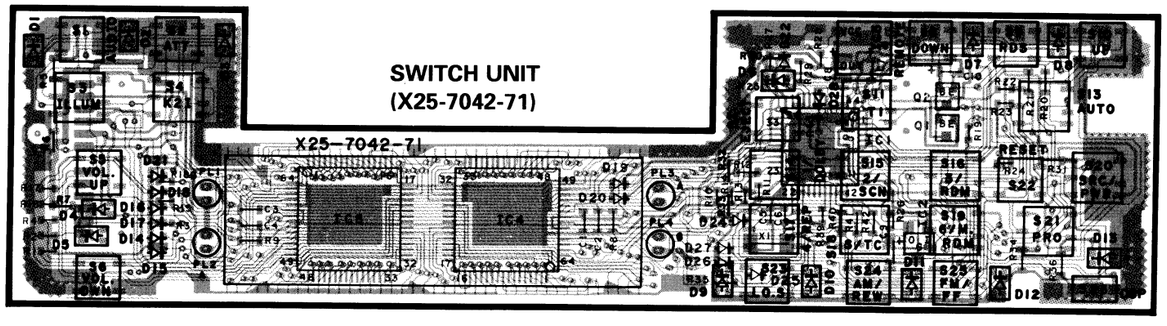

SWITCH UNIT
(X25-7042-71)

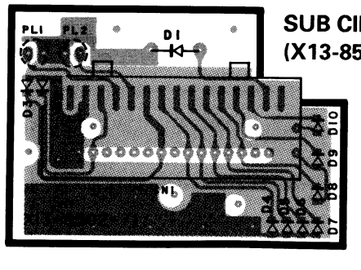

SUB CIRCUIT UNIT
(X13-8502-71)

Refer to the schematic diagram for the values of resistors and capacitors.

PC BOARD (COMPONENT SIDE VIEW)

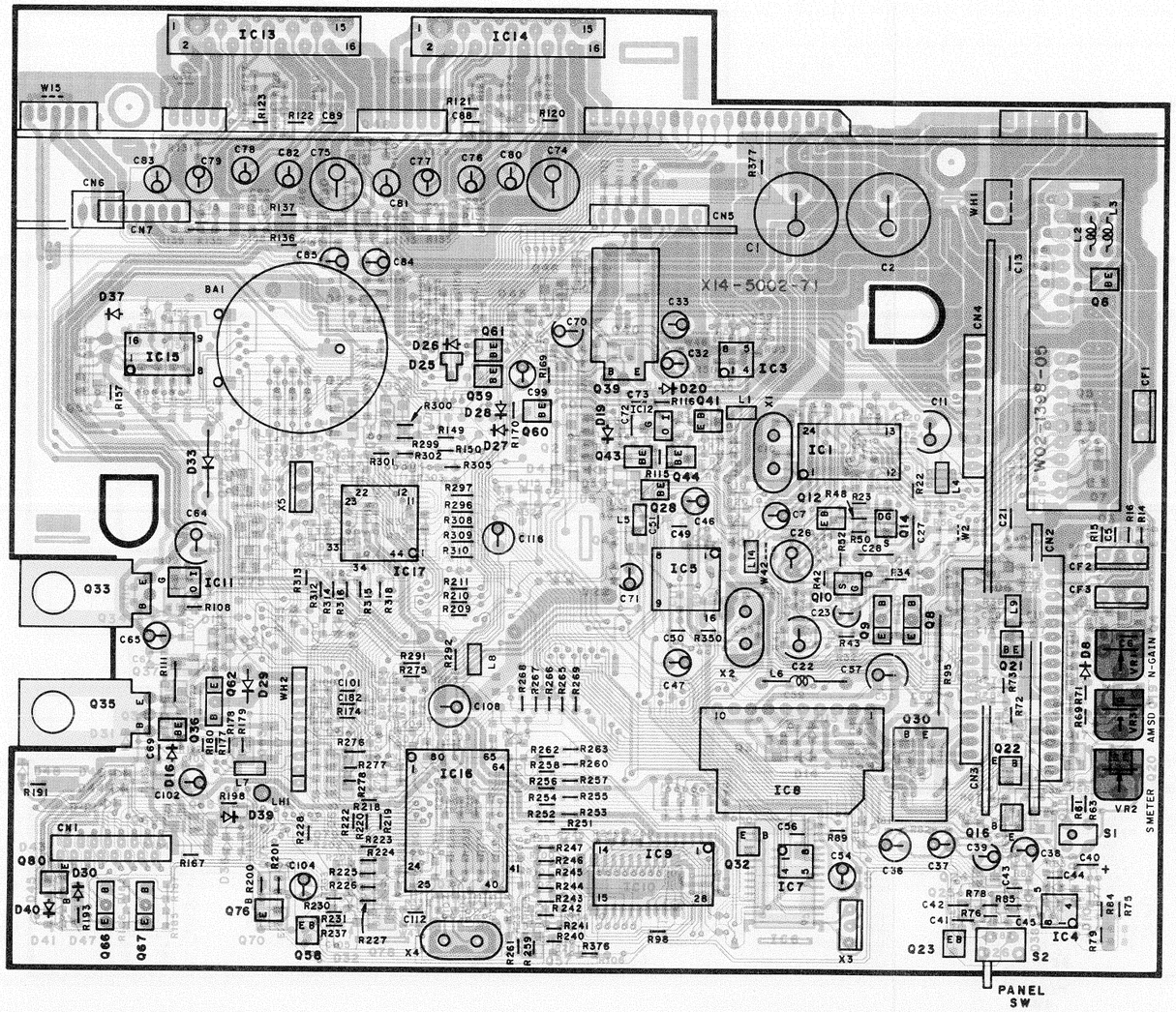

PC BOARD (FOIL SIDE VIEW)

SYNTHESIZER UNIT (X14-5002-71)

(b) Narrow gain :
Same as V35easured in Wide.

DC voltmeter

(a) Discriminator : 0V

DC voltmeter

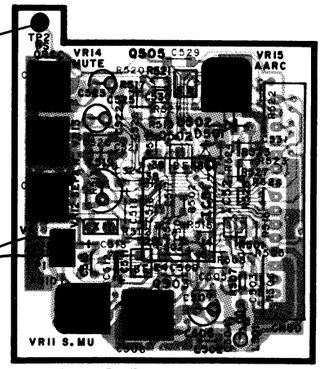

X14- B/5

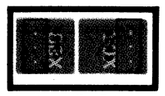

X14- E/5

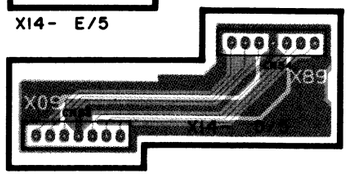

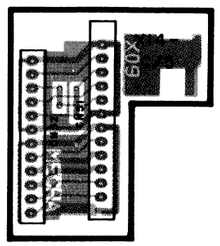

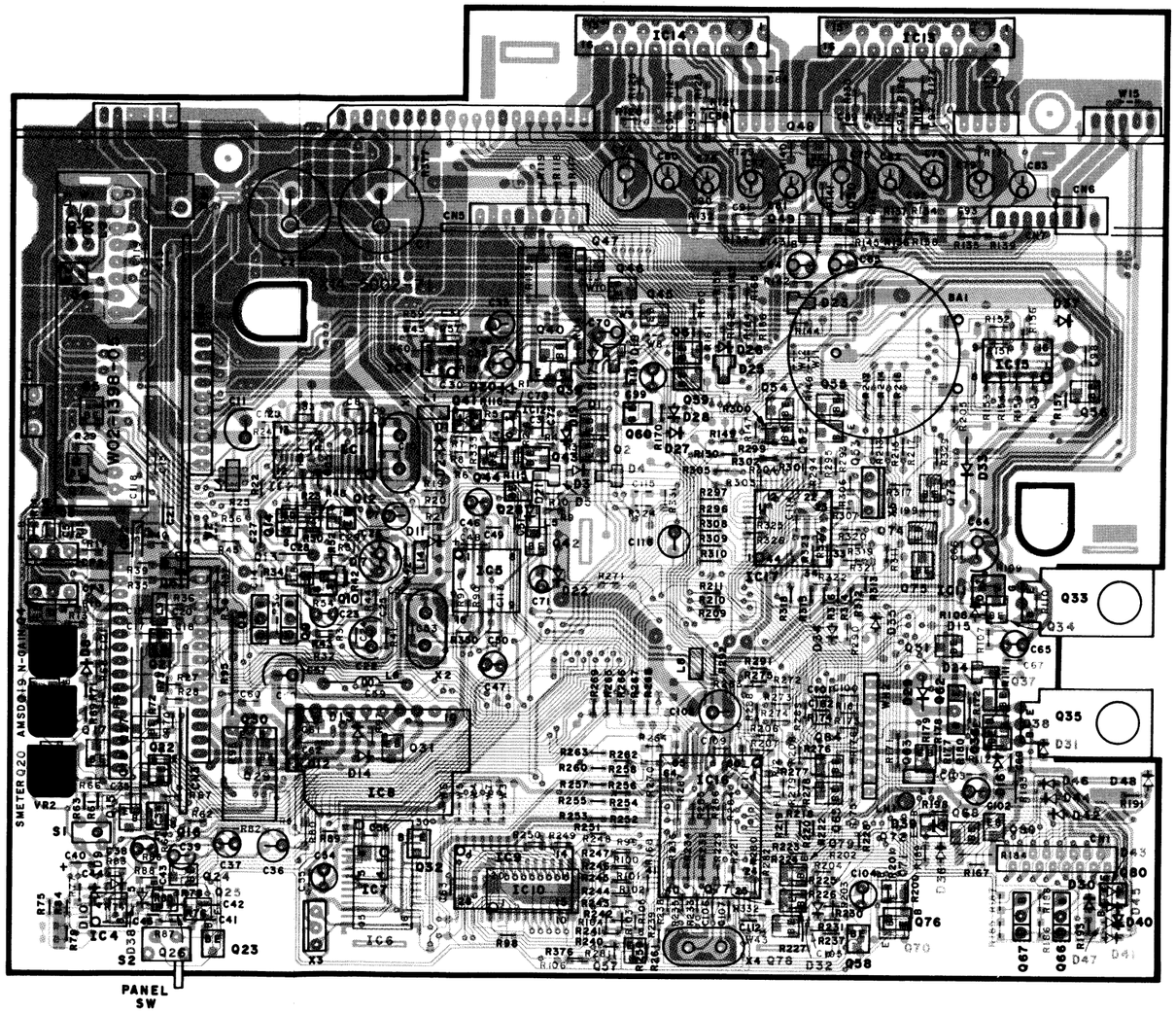

X14-5002-71

Ref. No.		Address
IC	Q	
1		3P
2		4P
3		3P
4		5O
5		4P
6		5P
7		5P
8		5P
9		5Q
10		5Q
11		4S
12		3P
13		2R
14		2Q
15		3S
16		5Q
17		4R
51		3M
52		3M
	1	3Q
	2	3Q
	3	4O
	4	4O
	5	3O
	6	3O
	7	3O
	8	4O
	9	4O
	10	4P
	12	4P
	13	4P
	14	4P
	15	5O
	16	5O
	17	5O
	18	5O
	19	4O
	20	5O
	21	4O
	22	5O
	23	5O
	24	5O
	25	5O
	26	5O
	27	4O
	28	3Q
	29	5O
	30	5O

Ref. No.		Address
IC	Q	
	31	5P
	32	5P
	33	4S
	34	4S
	35	4S
	36	5S
	37	4S
	38	4S
	39	3Q
	40	3Q
	41	3P
	42	4Q
	43	3Q
	44	3P
	48	2R
	49	2C
	50	2C
	51	4R
	52	3R
	53	3R
	54	3R
	55	3R
	56	3S
	57	5Q
	58	5R
	59	3Q
	60	3Q
	61	3Q
	62	4R
	63	5R
	64	5R
	65	5R
	66	5S
	67	5S
	68	5R
	69	5S
	70	5R
	71	5R
	72	5R
	73	4R
	74	4R
	75	4R
	76	5R
	77	5R
	80	5S
	502	2M
	503	3M
	505	2M

SUB CIRCUIT UNIT (X13-8502-71)

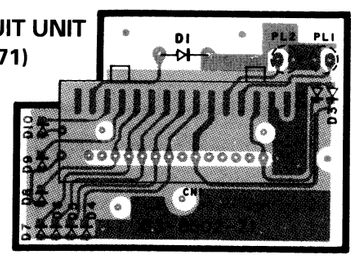

SWITCH UNIT (X25-7042-71)

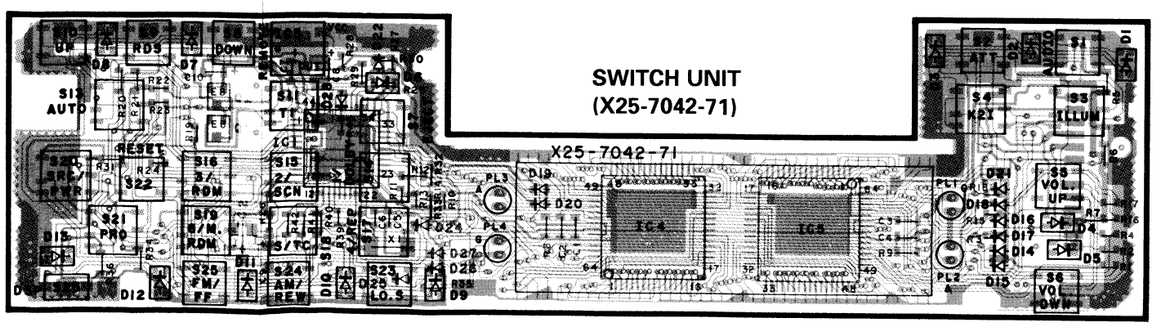

X25-7042-71

Ref. No.		Address
IC	Q	
1		6P
2		7O
3		6P
4		7Q
5		7R
	1	6O
	2	6O

Refer to the schematic diagram for the values of resistors and capacitors.

PC BOARD (FOIL SIDE VIEW)

SYNTHESIZER UNIT (X14-5002-71)

(b) Narrow gain :
Same as V35 easured in Wide.

DC voltmeter

(a) Discriminator : 0V

DC voltmeter

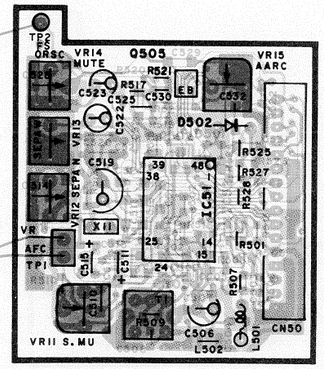

X14- B/5

X14- E/5

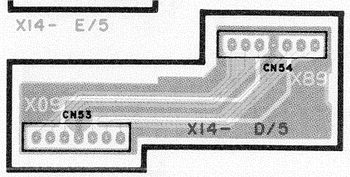

X14- D/5

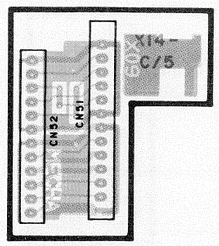

SUB CIRCUIT UNIT (X13-8502-71)

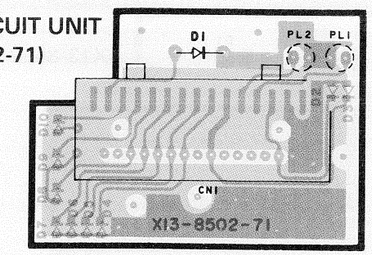

X14-5002-71

Ref. No.		Address
IC	Q	
1		3P
2		4P
3		3P
4		5O
5		4P
6		5P
7		5P
8		5P
9		5Q
10		5Q
11		4S
12		3P
13		2R
14		2Q
15		3S
16		5Q
17		4R
51		3M
52		3M
	1	3Q
	2	3Q
	3	4O
	4	4O
	5	3O
	6	3O
	7	3O
	8	4O
	9	4O
	10	4P
	12	4P
	13	4P
	14	4P
	15	5O
	16	5O
	17	5O
	18	5O
	19	4O
	20	5O
	21	4O
	22	5O
	23	5O
	24	5O
	25	5O
	26	5O
	27	4O
	28	3Q
	29	5O
	30	5O

Ref. No.		Address
IC	Q	
	31	5P
	32	5P
	33	4S
	34	4S
	35	4S
	36	5S
	37	4S
	38	4S
	39	3Q
	40	3Q
	41	3P
	42	4Q
	43	3Q
	44	3P
	48	2R
	49	2C
	50	2C
	51	4R
	52	3R
	53	3R
	54	3R
	55	3R
	56	3S
	57	5Q
	58	5R
	59	3Q
	60	3Q
	61	3Q
	62	4R
	63	5R
	64	5R
	65	5R
	66	5S
	67	5S
	68	5R
	69	5S
	70	5R
	71	5R
	72	5R
	73	4R
	74	4R
	75	4R
	76	5R
	77	5R
	80	5S
502		2M
503		3M
505		2M

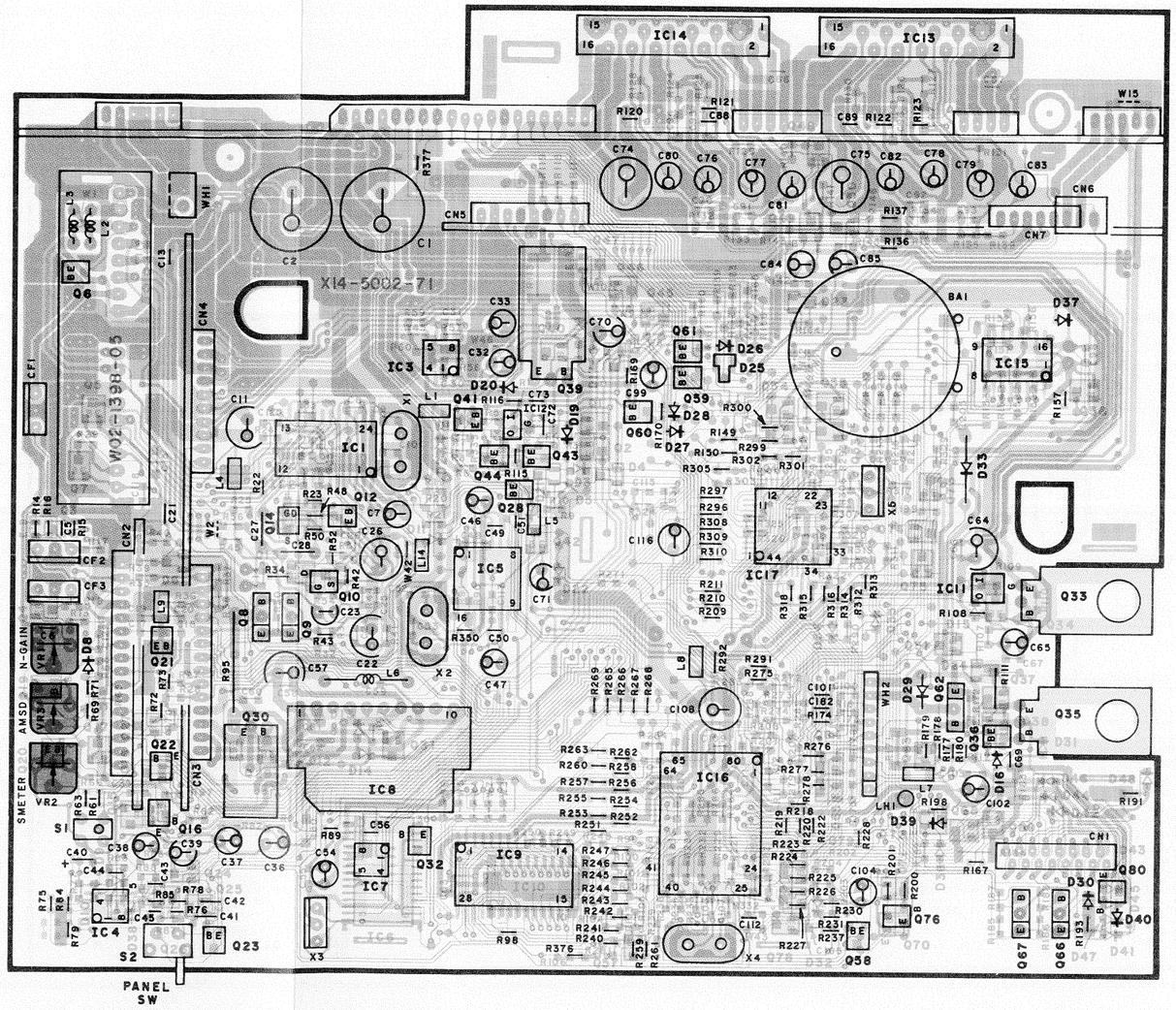

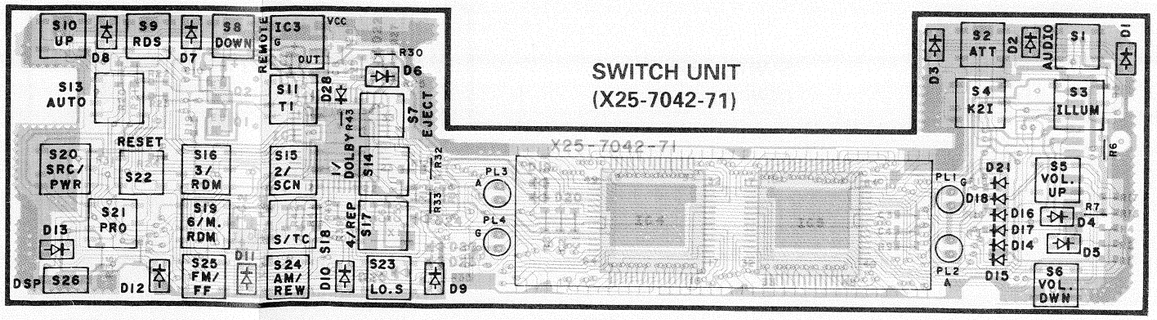

X25-7042-71

Ref. No.		Address
IC	Q	
1		6P
2		7O
3		6P
4		7Q
5		7R
	1	6O
	2	6O

Refer to the schematic diagram for the values of resistors and capacitors.

PC BOARD (COMPONENT SIDE VIEW)

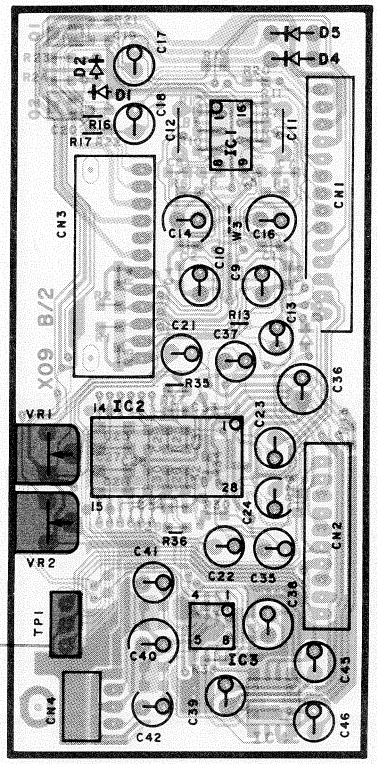

(c) Playback level : 300mV

AC voltmeter

DAUGHTER UNIT (X89-2002-71)

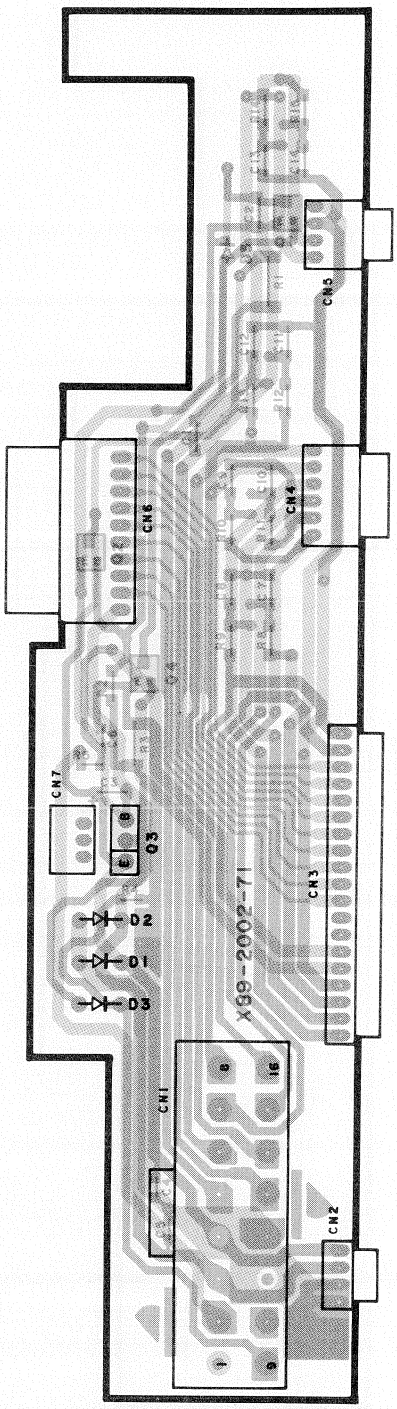

X89-2002-71

Ref. NO.		Address
IC	Q	
	1	2X
	2	4X
	3	5X
	4	4X

AUDIO UNIT (X09-5042-71)

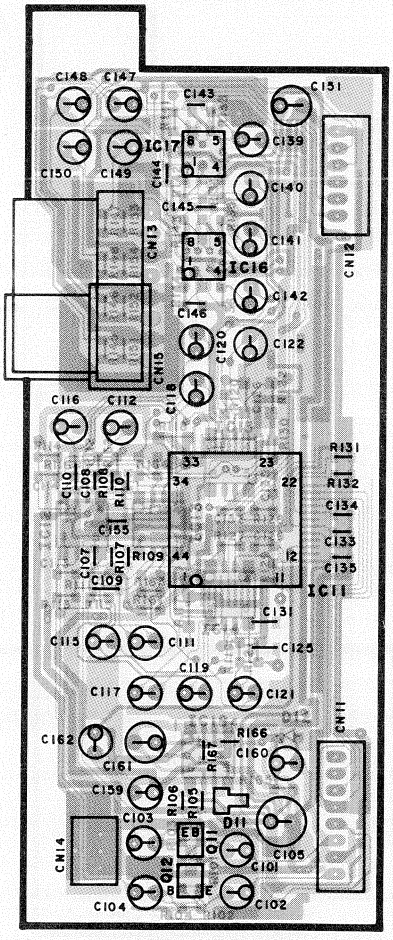

X09-5042-71

Ref. NO.		Address
IC	Q	
1		2W
2		3V
3		3W
4		4W
11		6W
12		6V
13		6V
14		6W
15		5W
16		5V
17		4V
18		6V
	1	1V
	2	2V
	11	7V
	12	7V

Refer to the schematic diagram for the values of resistors and capacitors.

PC BOARD (COMPONENT SIDE VIEW)

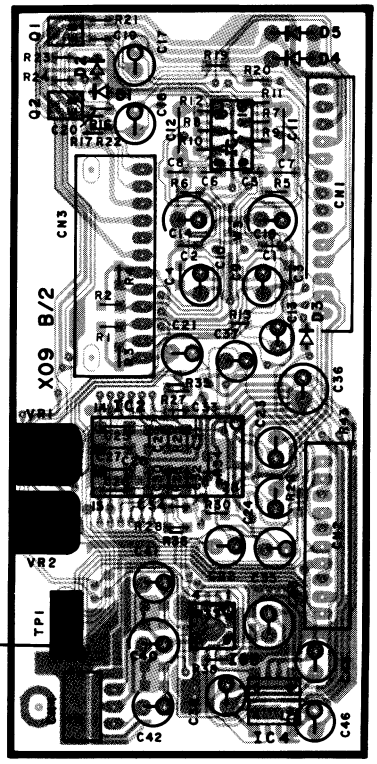

(c) Playback level : 300mV

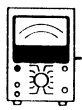

AC voltmeter

DAUGHTER UNIT (X89-2002-71)

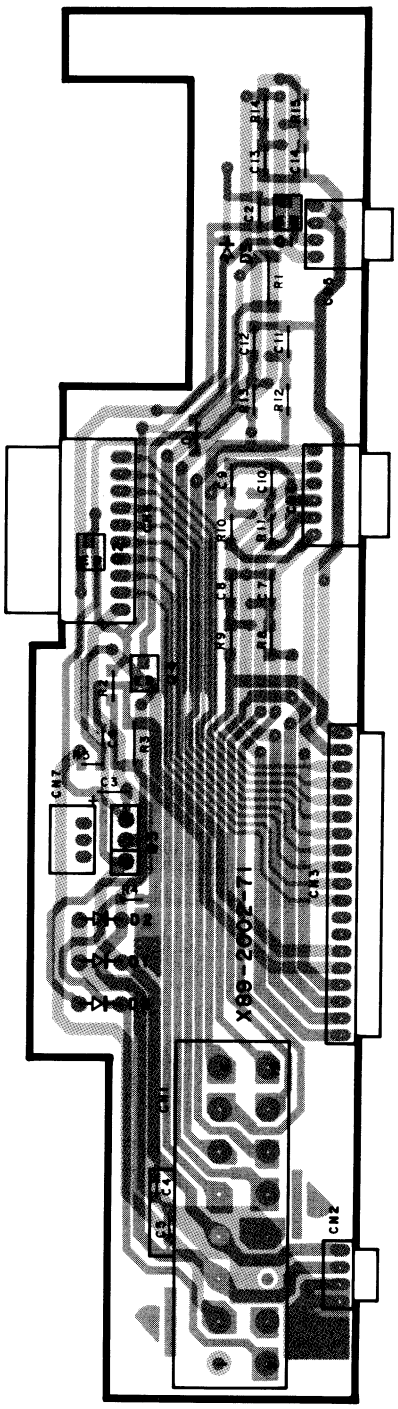

X89-2002-71

Ref. NO.		Address
IC	Q	
	1	2X
	2	4X
	3	5X
	4	4X

AUDIO UNIT (X09-5042-71)

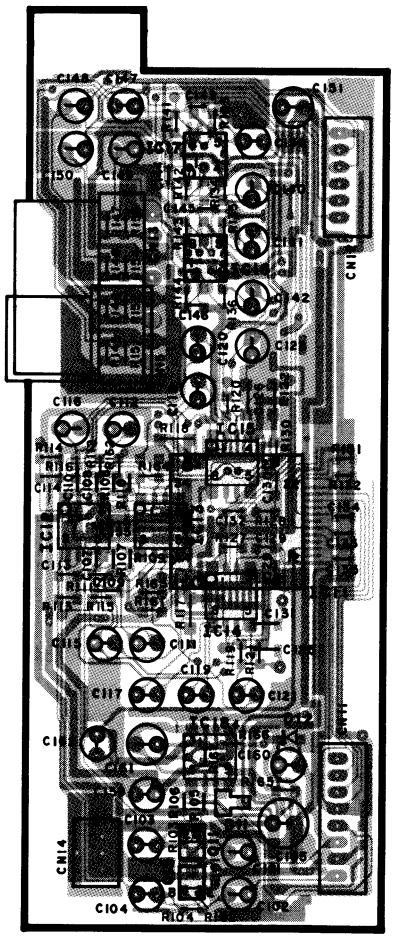

X09-5042-71

Ref. NO.		Address
IC	Q	
1		2W
2		3V
3		3W
4		4W
11		6W
12		6V
13		6V
14		6W
15		5W
16		5V
17		4V
18		6V
	1	1V
	2	2V
	11	7V
	12	7V

Refer to the schematic diagram for the values of resistors and capacitors.

PC BOARD (FOIL SIDE VIEW)

DAUGHTER UNIT (X89-2002-71)

X89-2002-71

Ref. NO.		Address
IC	Q	
	1	2AA
	2	4AA
	3	5AA
	4	4AA

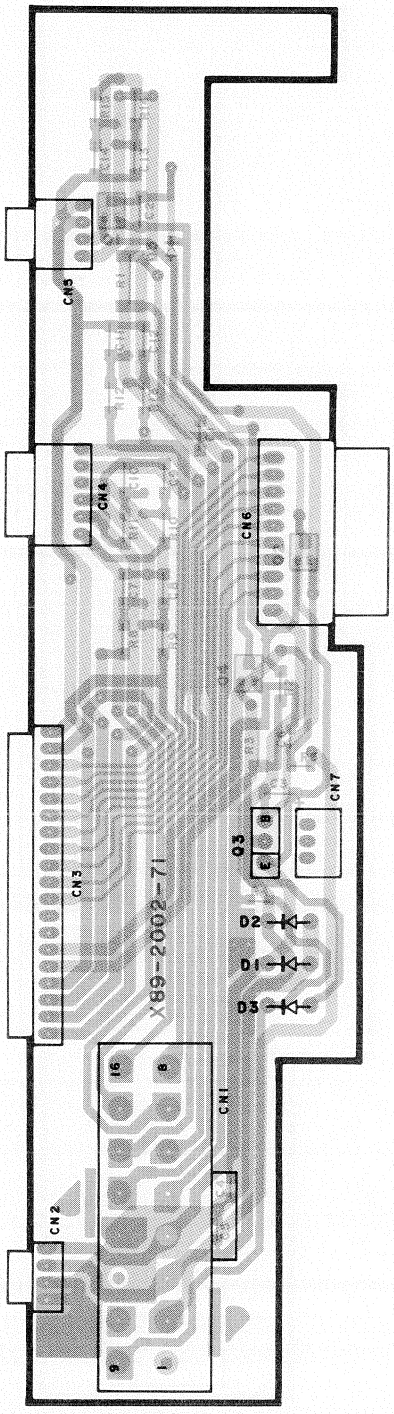

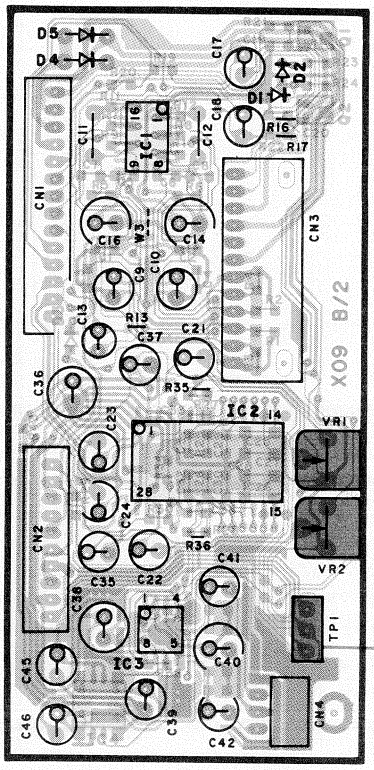

(c) Playback level : 300mV

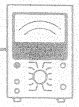

AC voltmeter

AUDIO UNIT (X09-5042-71)

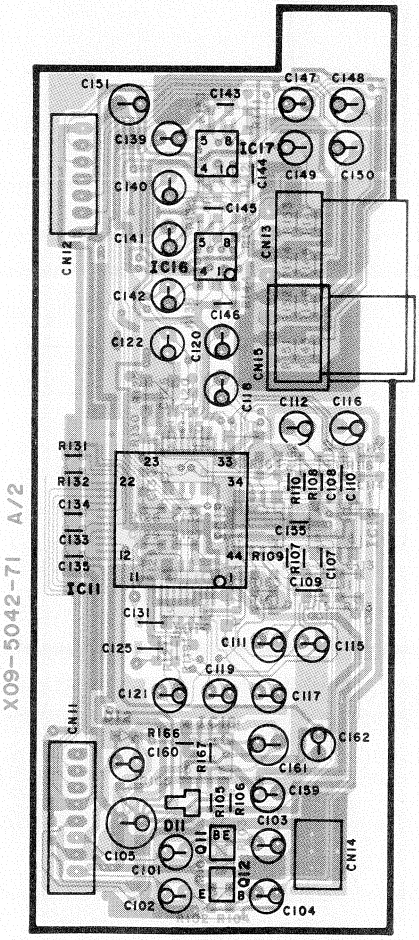

X09-5042-71

Ref. NO.		Address
IC	Q	
1		2AB
2		3AC
3		3AB
4		4AB
11		6AB
12		6AC
13		6AC
14		6AB
15		5AB
16		5AC
17		4AC
18		6AC
	1	1AC
	2	2AC
	11	7AC
	12	7AC

Refer to the schematic diagram for the values of resistors and capacitors.

PC BOARD (FOIL SIDE VIEW)

DAUGHTER UNIT (X89-2002-71)

X89-2002-71

Ref. NO.		Address
IC	Q	
	1	2AA
	2	4AA
	3	5AA
	4	4AA

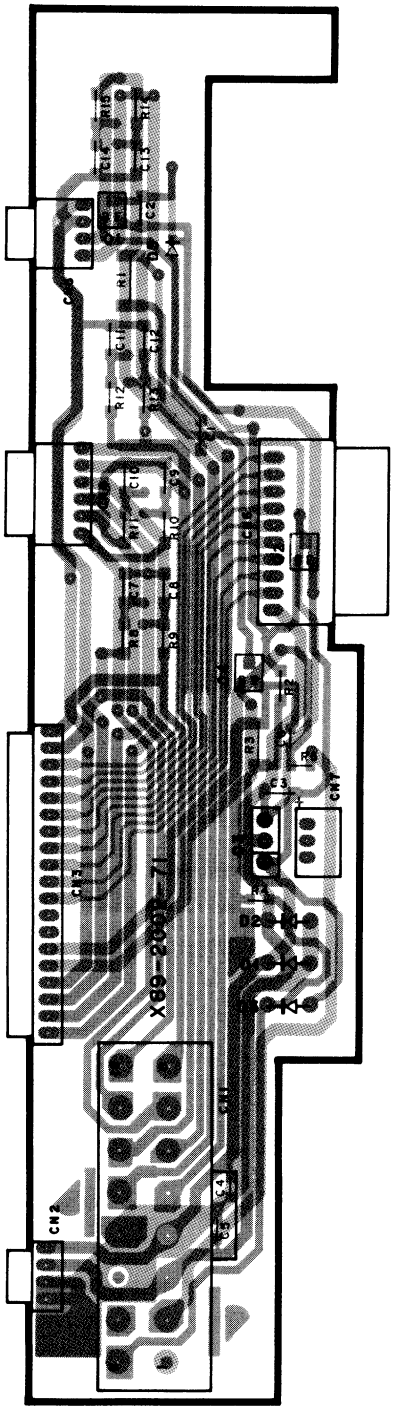

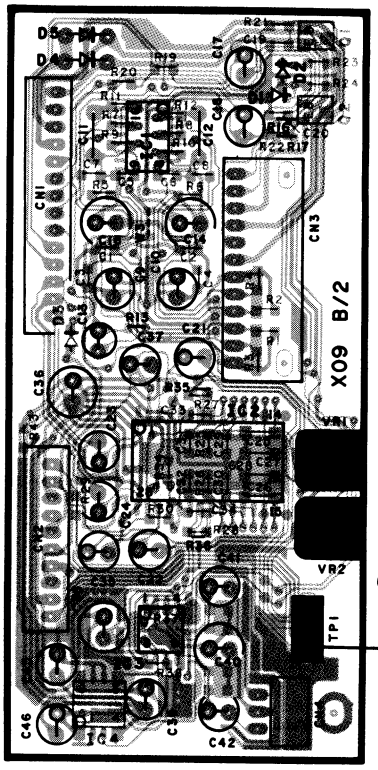

(c) Playback level : 300mV

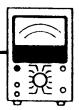

AC voltmeter

AUDIO UNIT (X09-5042-71)

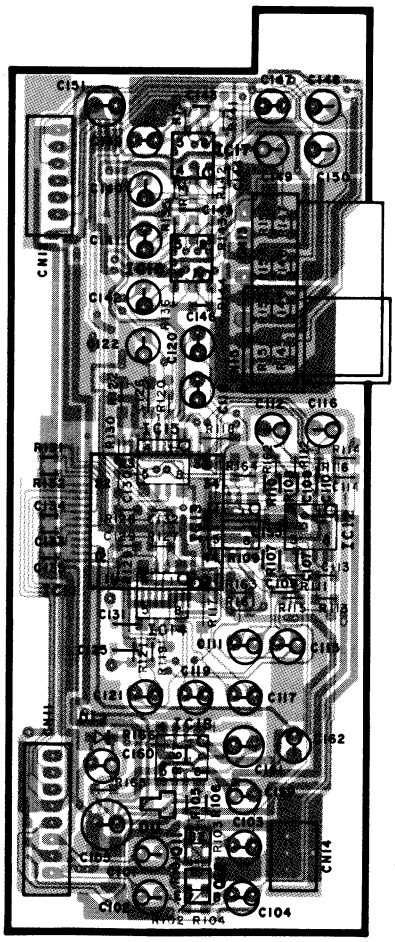

X09-5042-71

Ref. NO.		Address
IC	Q	
1		2AB
2		3AC
3		3AB
4		4AB
11		6AB
12		6AC
13		6AC
14		6AB
15		5AB
16		5AC
17		4AC
18		6AC
	1	1AC
	2	2AC
	11	7AC
	12	7AC

Refer to the schematic diagram for the values of resistors and capacitors.

(X14-5002-7I) (A/5)

IC1 : LC7218M
IC2 : TC4W66F
IC3,4 : NJM4565MD
IC5 : SAA6579T
IC6 : LC6543H-4600
IC7 : .....
IC8 : TA7291P
IC9 : LC3564QM-10

DTA114EK DTA124EK
DTA143XK DTA144EK
DTB123YK DTC114EK
DTC124EK DTC144EK
DTD123YK XDA124EK
XDC124EK XDC144EK
2SA1036K 2SA1037K
2SC2412K 2SC1413K
2SD1757K

2SC2411K

2SA1408

2SB1370F8

2SA1428

TC74HC573AF

NJM4565MD

SAA6579T

HA12161FP
LC3564QM-10

TA7291P

SN74HC367ANS

LC7218M

M38067M8D094FP

TC9233FK
75004GB-86
75004GB-86

IC1	: LC7218M	IC10	: TC74HC573AF
IC2	: TC4W66F	IC11	: M5237ML
IC3,4	: NJM4565MD	IC12	: PST572FMT
IC5	: SAA6579T	IC13,14	: AN7174K
IC6	: LC6543H-4600	IC15	: SN74HC367ANS
IC7	:	IC16	: M38067M8D094FP
IC8	: TA7291P	IC17	: 75004GB-864-3B4
IC9	: LC3564QM-10		

Q1,2,15~17,19,26,29,36,40,44, 50,58,64,65	: 2SC2412K	Q12,20,22~24,27,38,42,49,51, 57,70,71,77	: XDC144EK	Q63	: DTC114TK	D1,2	: MA8068-M	D16	: MA8
Q3,4	: 2SC2413K	Q13,18,59	: 2SA1037K	Q68,69	: DTD123YK	D3,8~11,14,15,19~22,26~28, 32,34~39	: 1SS355	D17	: MA8
Q5,25,52~55,61	: XDA124EK	Q28,41	: DTB123YK	Q73,80	: 2SC2411K	D4,6,23,25	: DAP202K	D29	: ERA
Q6,11,31,32,56,60,75	: XDC124EK	Q30	: 2SA1408(O)			D5,24	: DAN202K	D30,40~48	: MA8
Q7,21,48,72,74,76	: DTA144EK	Q33,35,39	: 2SB1370FB			D7,18	: DA204K	D31	: MA8
Q8,9,62,66,67	: 2SA1428	Q34,37	: DTA114EK			D12	: MA8091-M	D33	: SD1
Q10,14	: 2SK536	Q43	: 2SA1036K			D13	: MA8056-M		

TA7291P

SN74HC367ANS

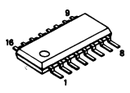

LC7218M

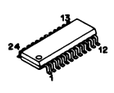

M38067M8D094FP

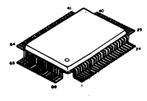

TC9233FK
75004GB-863-3B4
75004GB-864-3B4

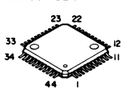

LC7582E

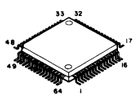

PST572DMT

M5237ML

- DC voltages are as measured with a high impedance voltmeter. Values individual instruments or/and units.
- Die angegebenen Gleichspannungswerte wurden mit einem hochohmigen Meßwerte aufgrund von Unterschieden zwischen einzelnen Instrumenten

CAUTION : For continued safety, replace safety critical components only wi to parts list). ⚠ Indicates safety critical components. To reduce the risk of measurements shall be carried out (exposed parts are acceptably insulated fr returned to the customer.

: TC74HC573AF
: M5237ML
: PST572FMT
: AN7174K
: SN74HC367ANS
: M38067M8D094FP
: 75004GB-864-3B4

Q1,2,15~17,19,26,29,36,40,44, 50,58,64,65	: 2SC2412K	Q12,20,22~24,27,38,42,49,51, 57,70,71,77	: XDC144EK	Q63	: DTC114TK	D1,2	: MA8068-M	D16	: MA8110-M
Q3,4	: 2SC2413K	Q13,18,59	: 2SA1037K	Q68,69	: DTD123YK	D3,8~11,14,15,19~22,26~28, 32,34~39	: 1SS355	D17	: MA8051-M
Q5,25,52~55,61	: XDA124EK	Q28,41	: DTB123YK	Q73,80	: 2SC2411K	D4,6,23,25	: DAP202K	D29	: ERA15-01
Q6,11,31,32,56,60,75	: XDC124EK	Q30	: 2SA1408(O)			D5,24	: DAN202K	D30,40~48	: MA8062-M
Q7,21,48,72,74,76	: DTA144EK	Q33,35,39	: 2SB1370FB			D7,18	: DA204K	D31	: MA8120-M
Q8,9,62,66,67	: 2SA1428	Q34,37	: DTA114EK			D12	: MA8091-M	D33	: SD184-1
Q10,14	: 2SK536	Q43	: 2SA1036K			D13	: MA8056-M		

(E30-4069-05)

ANTENNA

SIGNAL LINE
GND LINE
+B LINE

X09-B/2-CN2 2/3 A
MECHANISM 2/3 B
X09-A/2-CN11 2/3 C
X09-A/2-CN12 2/3 D
X89-CN2 2/3 E
X89-CN3 2/3 F
X89-CN5 2/3 G
X14-B/5-CN50 3/3 H
X09-B/2-CN1 2/3 I
X89-CN4 2/3 K
X13- 3/3 J

KRC-954R(E)(1/3)

LC7582E PST572DMT M5237ML

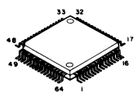

- DC voltages are as measured with a high impedance voltmeter. Values may vary slightly due to variations between individual instruments or/and units.
- Die angegebenen Gleichspannungswerte wurden mit einem hochohmigen Voltmeter gemessen. Dabei schwanken die Meßwerte aufgrund von Unterschieden zwischen einzelnen instrumenten oder Geräten u.U. geringfügig.

CAUTION : For continued safety, replace safety critical components only with manufacturer's recommended parts (refer to parts list). ⚠ Indicates safety critical components. To reduce the risk of electric shock, leakage-current or resistance measurements shall be carried out (exposed parts are acceptably insulated from the supply circuit) before the appliance is returned to the customer.

Y36-1722-70

KRC-954R

KENWOOD

(X09-5042-71)(B/2)

(X09-)(B/2)
IC1 : TA7705F
IC2 : HA12161FP
IC3 : M5280FP
IC4 : NJM4565MD

Q1,2 : 2SD1757K

D1,2,3 : MA110
D4,5 : ERA15-01

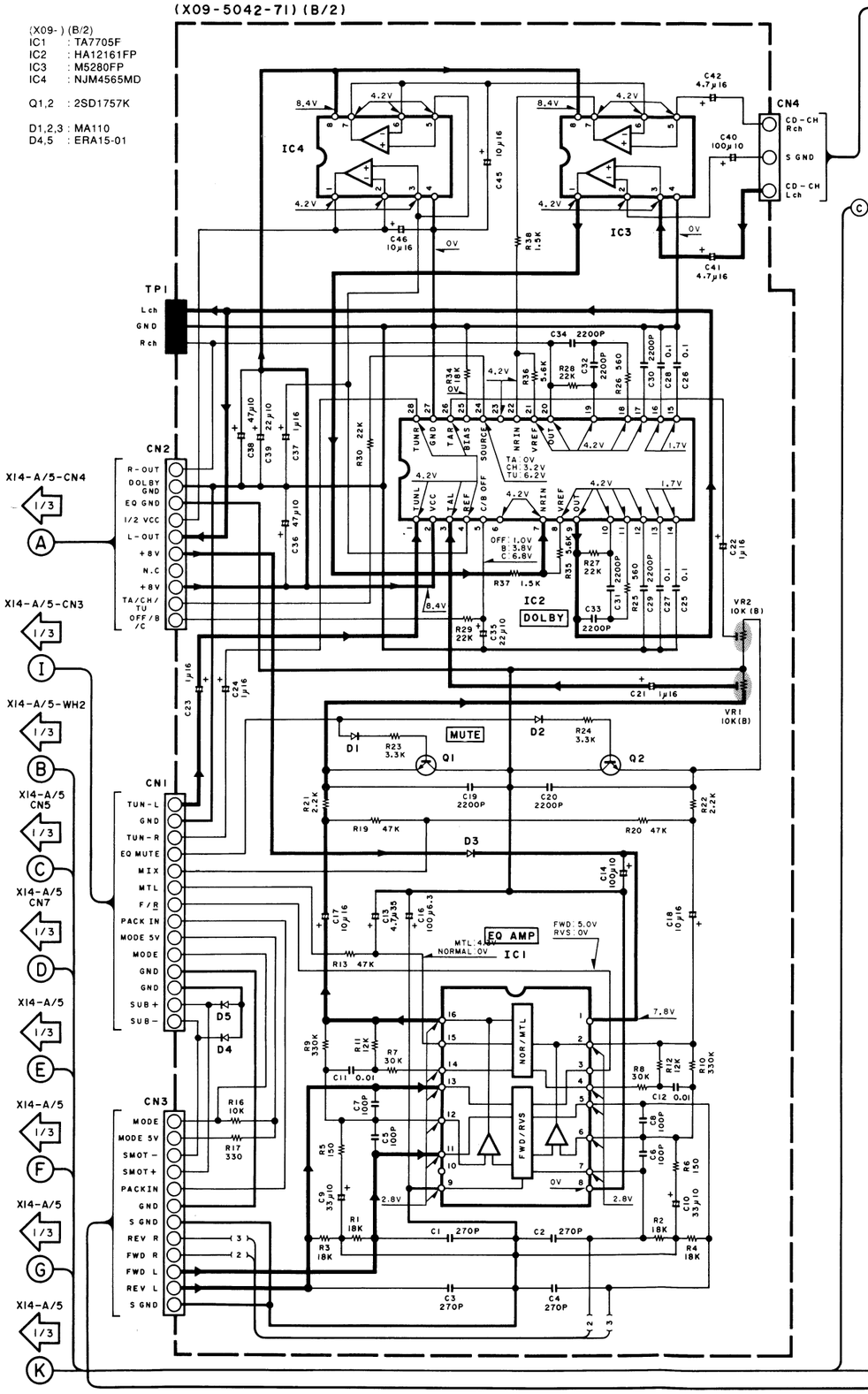

X14-A/5-CN4 1/3 A
X14-A/5-CN3 1/3 I
X14-A/5-WH2 1/3 B
X14-A/5 CN5 1/3 C
X14-A/5 CN7 1/3 D
X14-A/5 1/3 E
X14-A/5 1/3 F
X14-A/5 1/3 G
X14-A/5 1/3 K

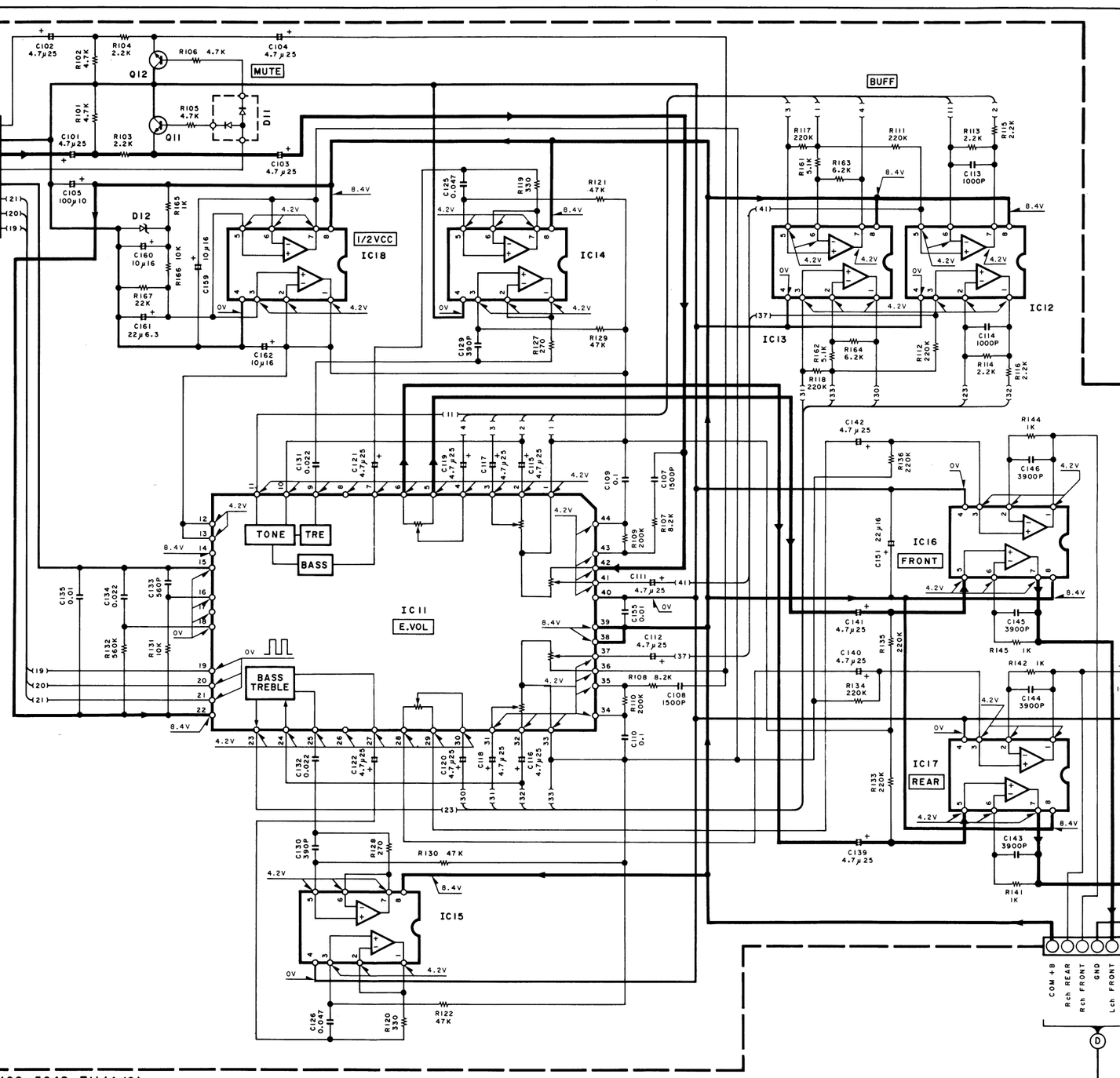

(X09-5042-71)(A/2)

(X09-)(A/2)
IC11 : TC9233F
IC12~18 : NJM4565MD

Q11,12 : 2SD1757K

D11 : DAP202K
D12 : MA8062-M

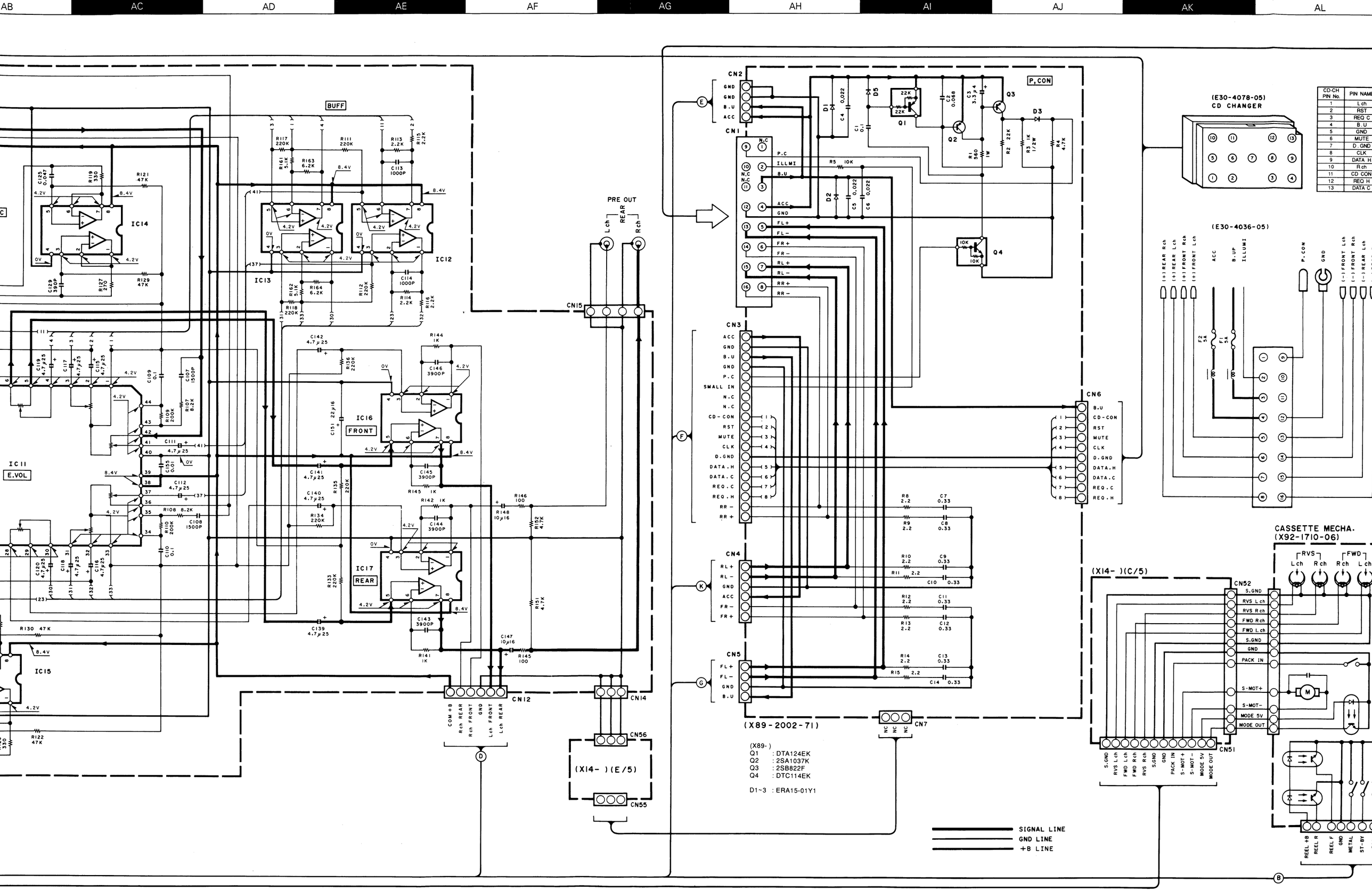

CD-CH PIN No.	PIN NAME
1	Lch
2	RST
3	REQ C
4	B.U
5	GND
6	MUTE
7	D.GND
8	CLK
9	DATA H
10	Rch
11	CD CON
12	REQ H
13	DATA C

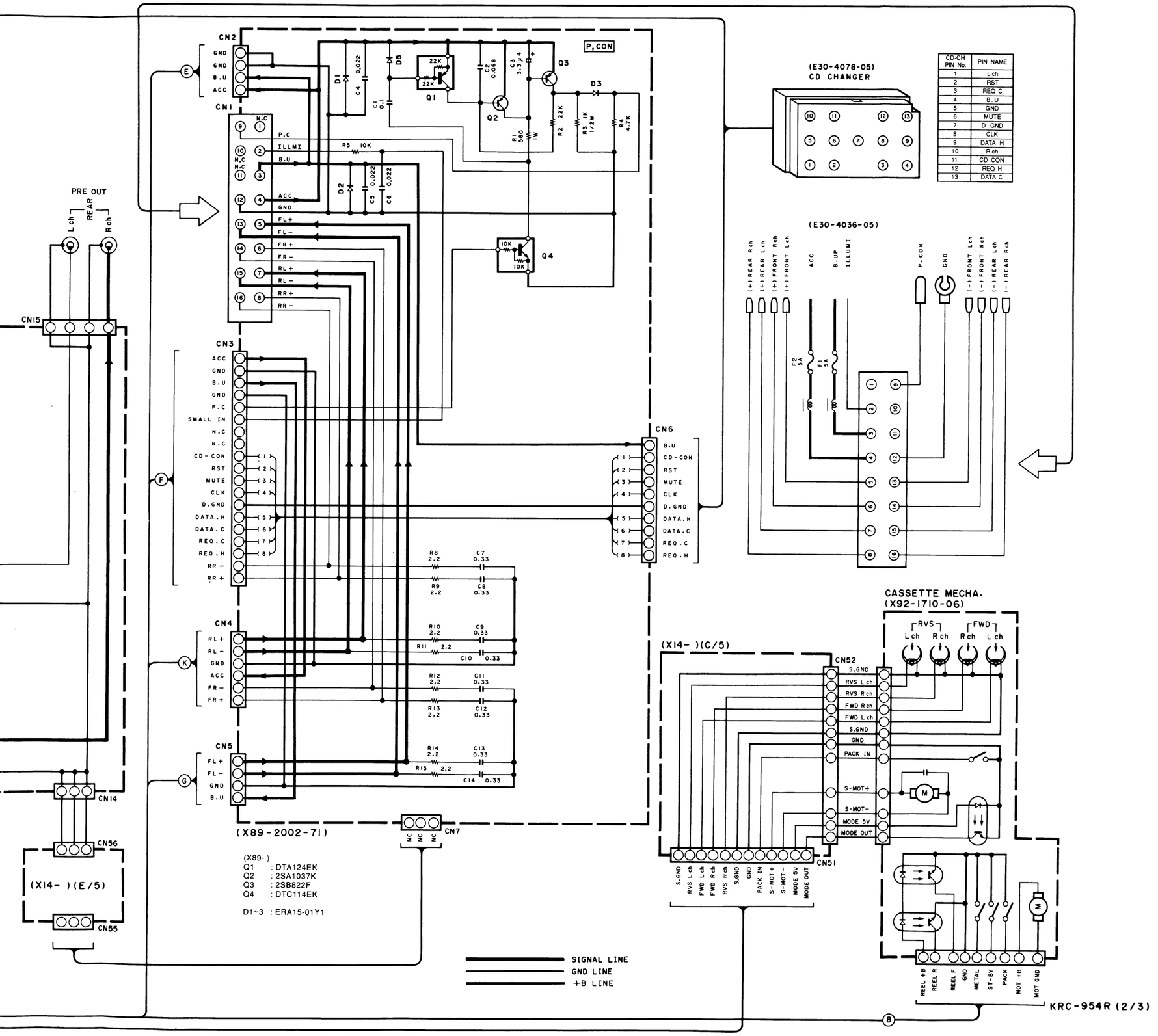

- DC voltages are as measured with a high impedance voltmeter. Values may vary slightly due to variations between individual instruments or/and units.
- Die angegebenen Gleichspannungswerte wurden mit einem hochohmigen Voltmeter gemessen. Dabei schwanken die Meßwerte aufgrund von Unterschieden zwischen einzelnen instrumenten oder Geräten u.U. geringfügig.

CAUTION: For continued safety, replace safety critical components only with manufacturer's recommended parts (refer to parts list). ⚠ Indicates safety critical components. To reduce the risk of electric shock, leakage-current or resistance measurements shall be carried out (exposed parts are acceptably insulated from the supply circuit) before the appliance is returned to the customer. DOLBY and the double-D symbol are tradmarks of Dolby Laboratories Licensing Corporation. Noise reduction circuit made under license from Dolby Laboratories Licensing Corporation.

Y36-1722-70

KRC-954R

KENWOOD

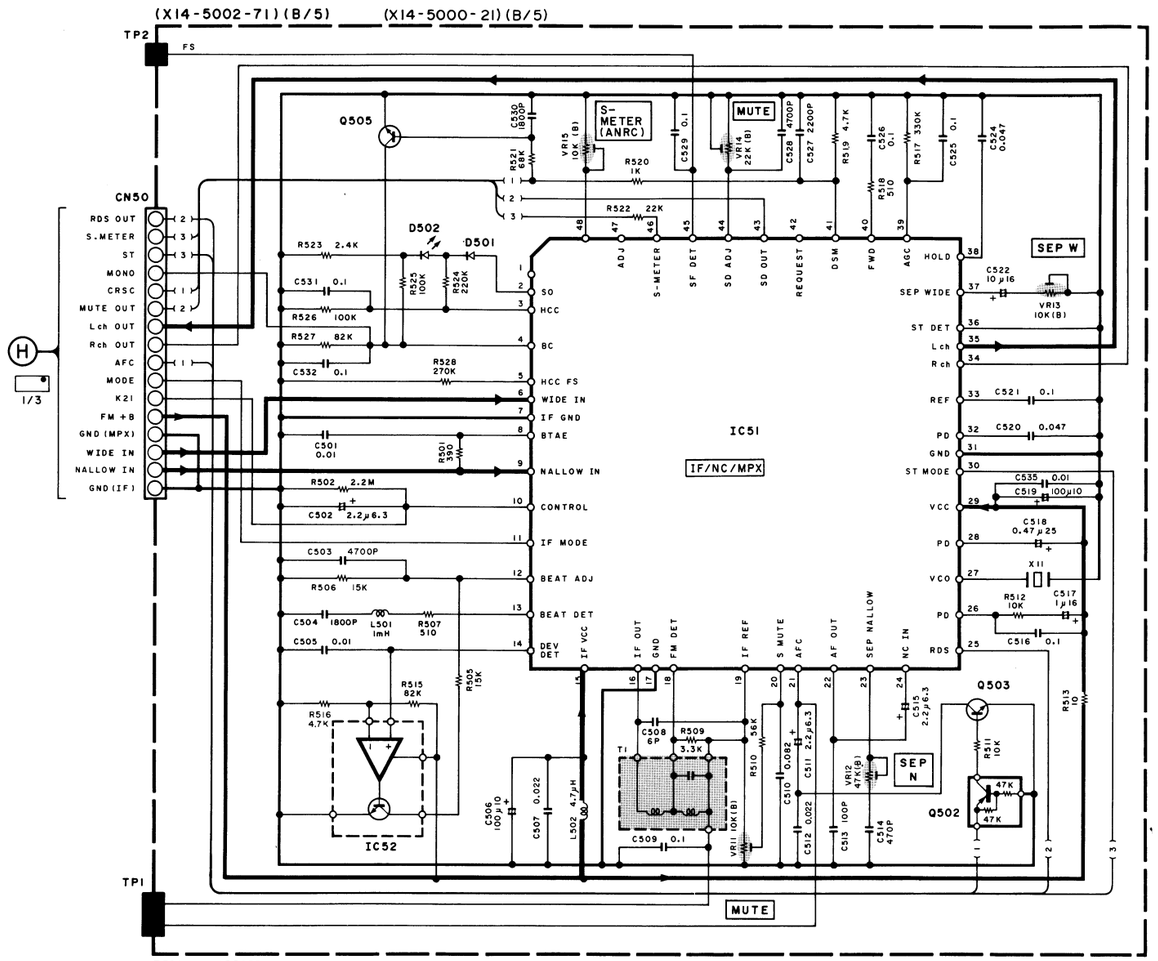

D501 :1SS355
D502 :B30-1405-05

Q502 :DTA144EK
Q503,504 :2SC2412K

X11 :L78-0526-05

IC51 :KKC04
IC52 :TA75S393F

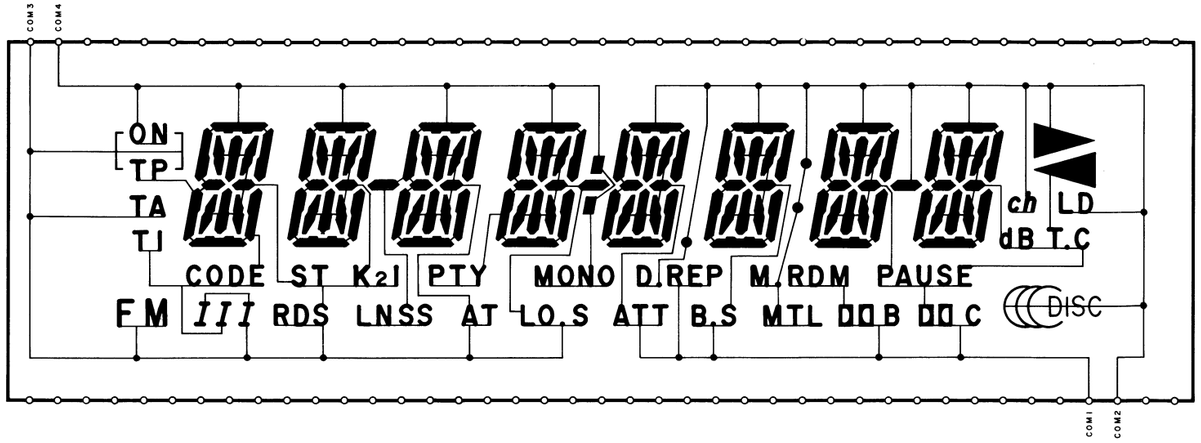

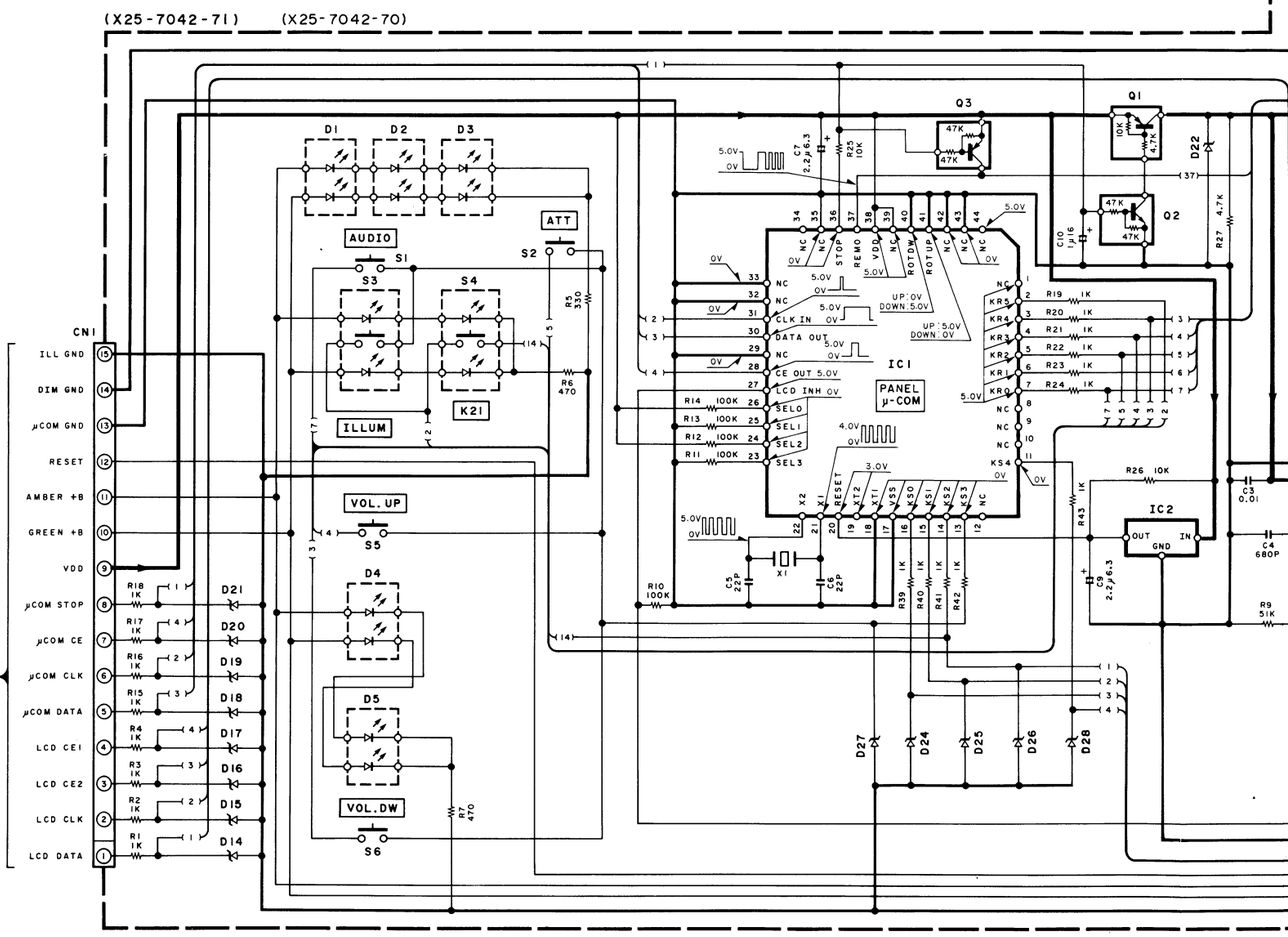

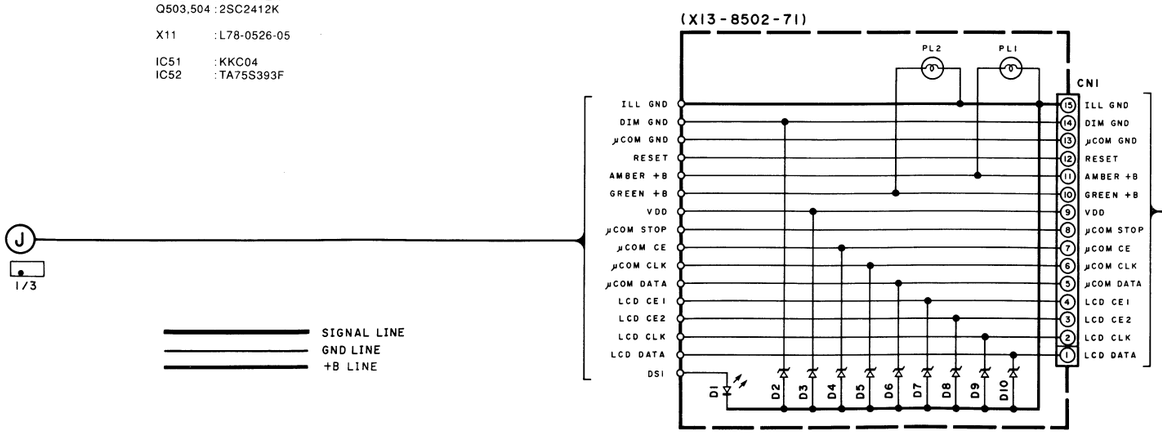

D1 :B30-1393-05
D2~10 :MA8062-M

PL1,2 :B30-1406-05

SIGNAL LINE
GND LINE
+B LINE

IC1	:μPD75004GB-863-3B4
IC2	:PST572DMT
IC3	:RS-21
IC4,5	:LC7582E
Q1	:DTA143XK
Q2	:DTC144EK or XDC144EK
Q3	:DTA144EK
D1~13	:B30-1349-05
D14~22,24~28	:MA8062-M
S1,2,5~10,22~25	:S40-1601-15
S3,4,11,13~21	:S40-1606-05
S26	:S70-0814-05
X1	:L78-0505-05
PL1,4	:B30-1306-05
PL2,3	:B30-1305-05

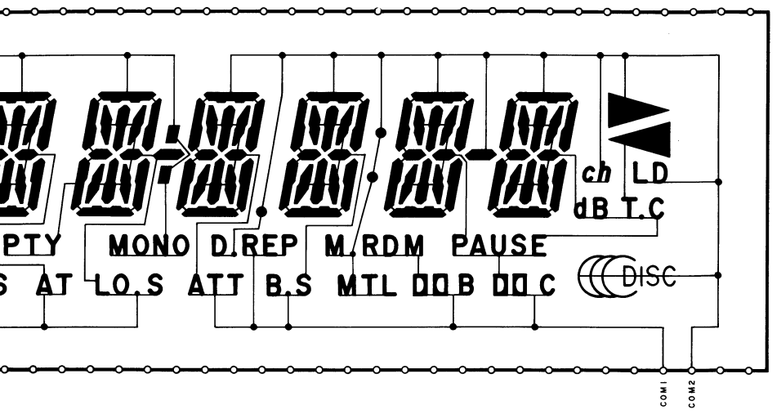

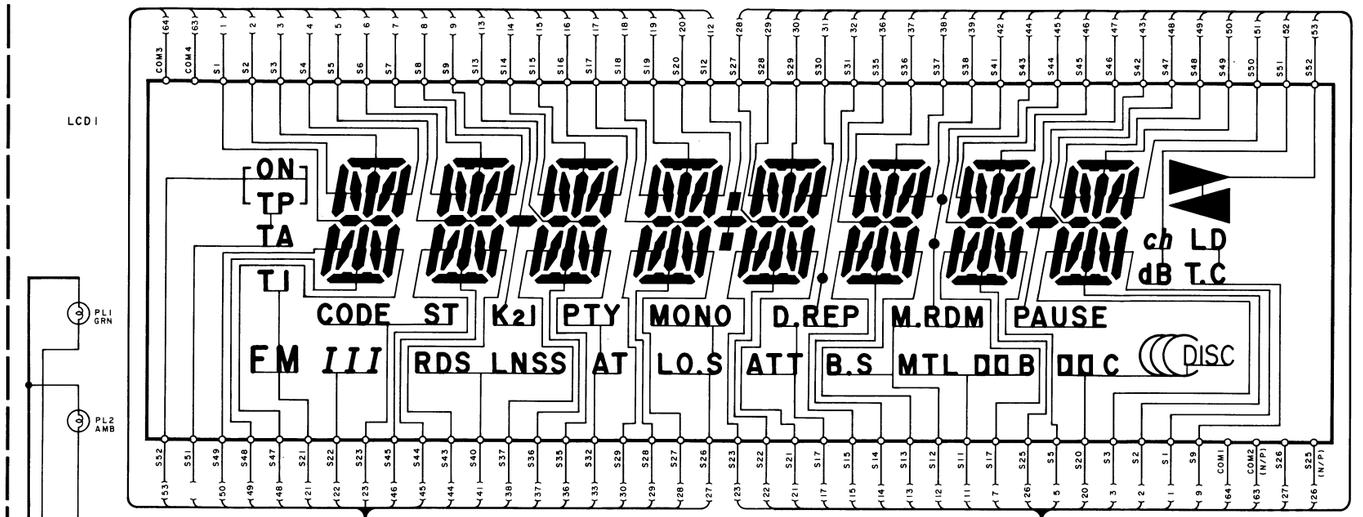

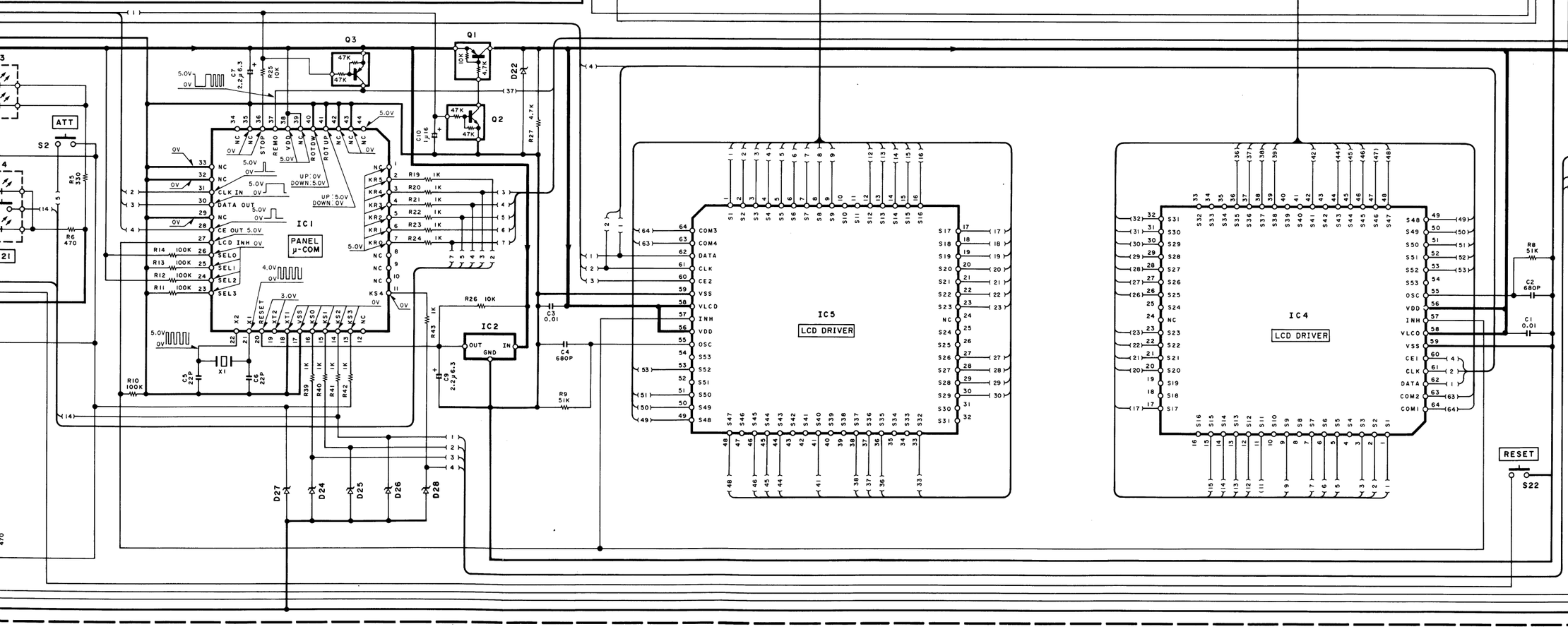

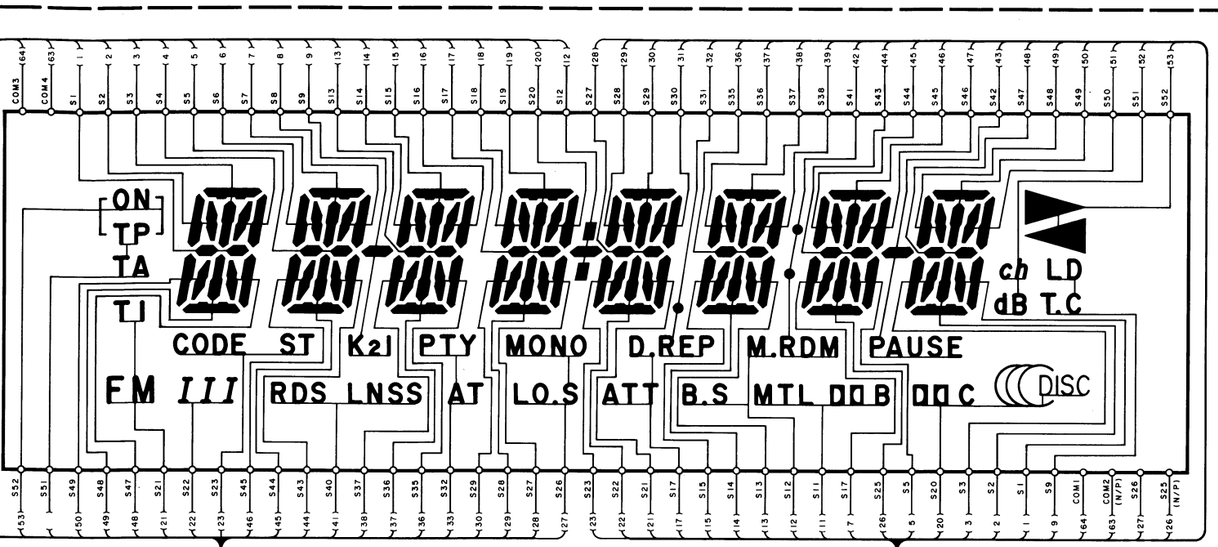

IC1 :μPD75004GB-863-3B4
IC2 :PST572DMT
IC3 :RS-21
IC4,5 :LC7582E

Q1 :DTA143XK
Q2 :DTC144EK or XDC144EK
Q3 :DTA144EK

D1~13 :B30-1349-05
D14~22,24~28 :MA8062-M

S1,2,5~10,22~25 :S40-1601-15
S3,4,11,13~21 :S40-1606-05
S26 :S70-0814-05

X1 :L78-0505-05

PL1,4 :B30-1306-05
PL2,3 :B30-1305-05

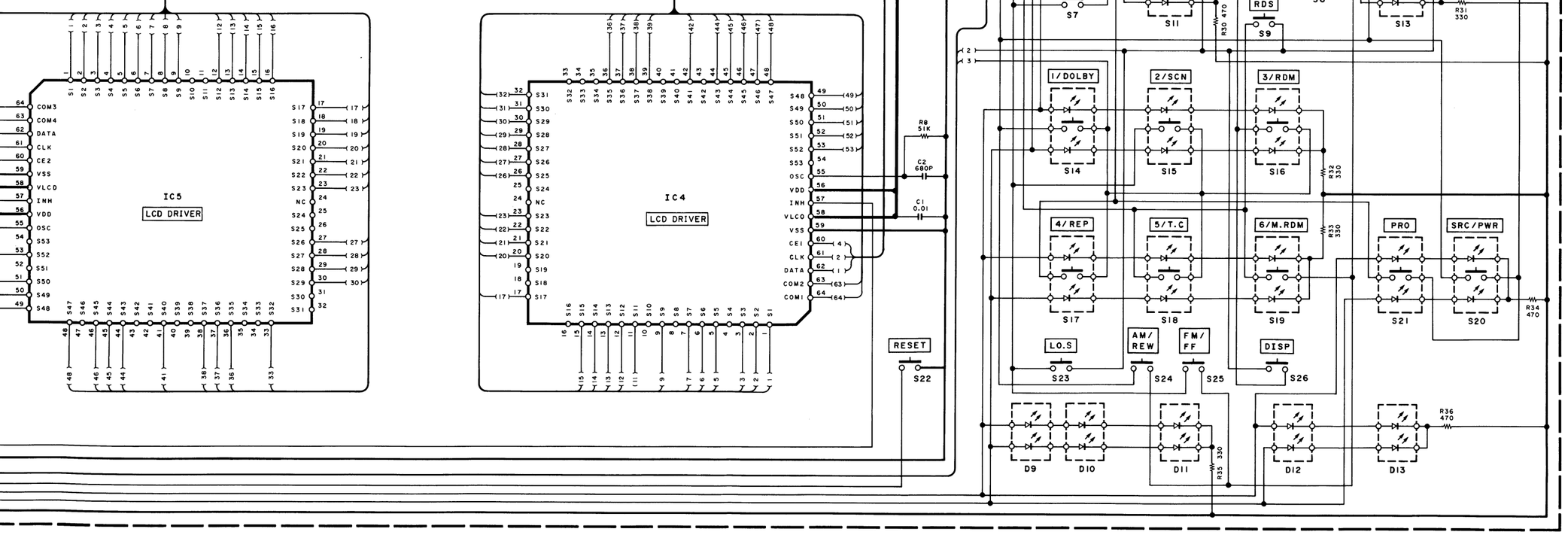

- DC voltages are as measured with a high impedance voltmeter. Values may vary slightly due to variations between individual instruments or/and units.
- Die angegebenen Gleichspannungswerte wurden mit einem hochohmigen Voltmeter gemessen. Dabei schwanken die Meßwerte aufgrund von Unterschieden zwischen einzelnen instrumenten oder Geräten u.U. geringfügig.

CAUTION : For continued safety, replace safety critical components only with manufacturer's recommended parts (refer to parts list). ⚠ Indicates safety critical components. To reduce the risk of electric shock, leakage-current or resistance measurements shall be carried out (exposed parts are acceptably insulated from the supply circuit) before the appliance is returned to the customer.

KRC-1054R/954R/927 (3/3)

EXPLODED VIEW (MECHANISM)

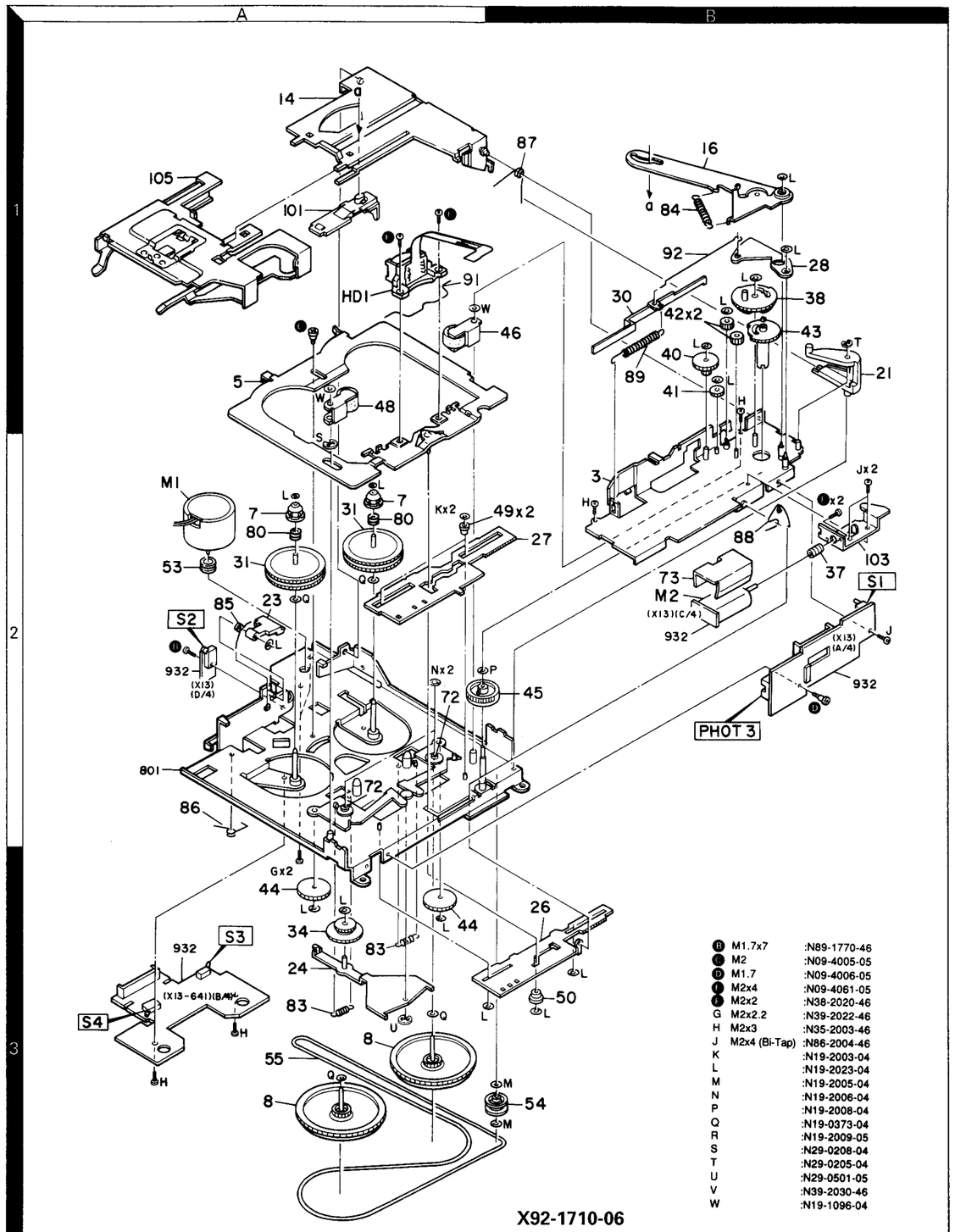

B	M1.7x7	:N89-1770-46
C	M2	:N09-4005-05
D	M1.7	:N09-4006-05
I	M2x4	:N09-4061-05
J	M2x2	:N38-2020-46
G	M2x2.2	:N39-2022-46
H	M2x3	:N35-2003-46
J	M2x4 (Bi-Tap)	:N86-2004-46
K		:N19-2003-04
L		:N19-2023-04
M		:N19-2005-04
N		:N19-2006-04
P		:N19-2008-04
Q		:N19-0373-04
R		:N19-2009-05
S		:N29-0208-04
T		:N29-0205-04
U		:N29-0501-05
V		:N39-2030-46
W		:N19-1096-04

Parts with the exploded numbers larger than 700 are not supplied.

KRC-954R

EXPLODED VIEW (UNIT)

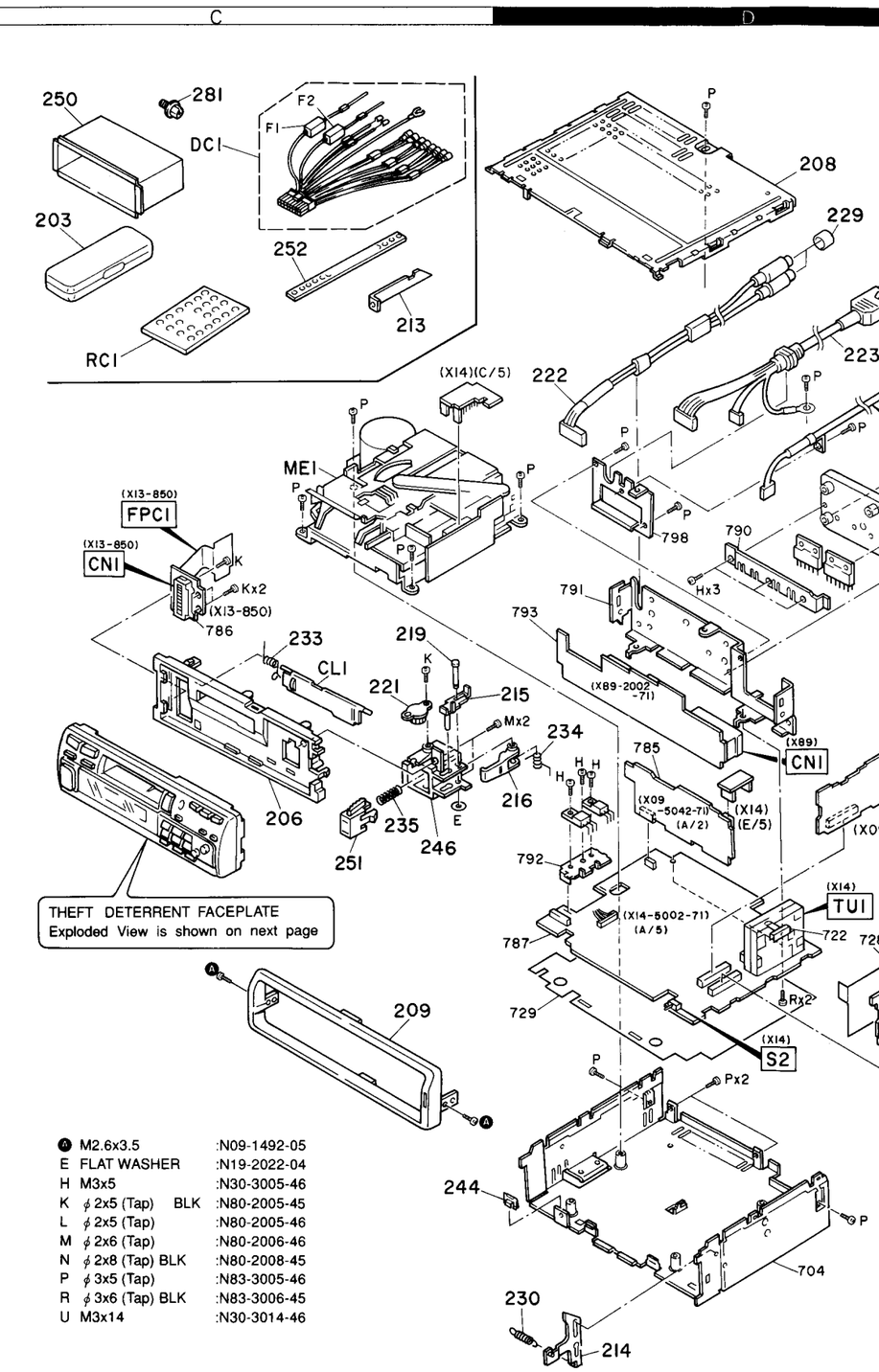

A	M2.6x3.5	:N09-1492-05
E	FLAT WASHER	:N19-2022-04
H	M3x5	:N30-3005-46
K	ϕ2x5 (Tap) BLK	:N80-2005-45
L	ϕ2x5 (Tap)	:N80-2005-46
M	ϕ2x6 (Tap)	:N80-2006-46
N	ϕ2x8 (Tap) BLK	:N80-2008-45
P	ϕ3x5 (Tap)	:N83-3005-46
R	ϕ3x6 (Tap) BLK	:N83-3006-45
U	M3x14	:N30-3014-46

Parts with the exploded numbers larger than 700 are

EXPLODED VIEW (UNIT)

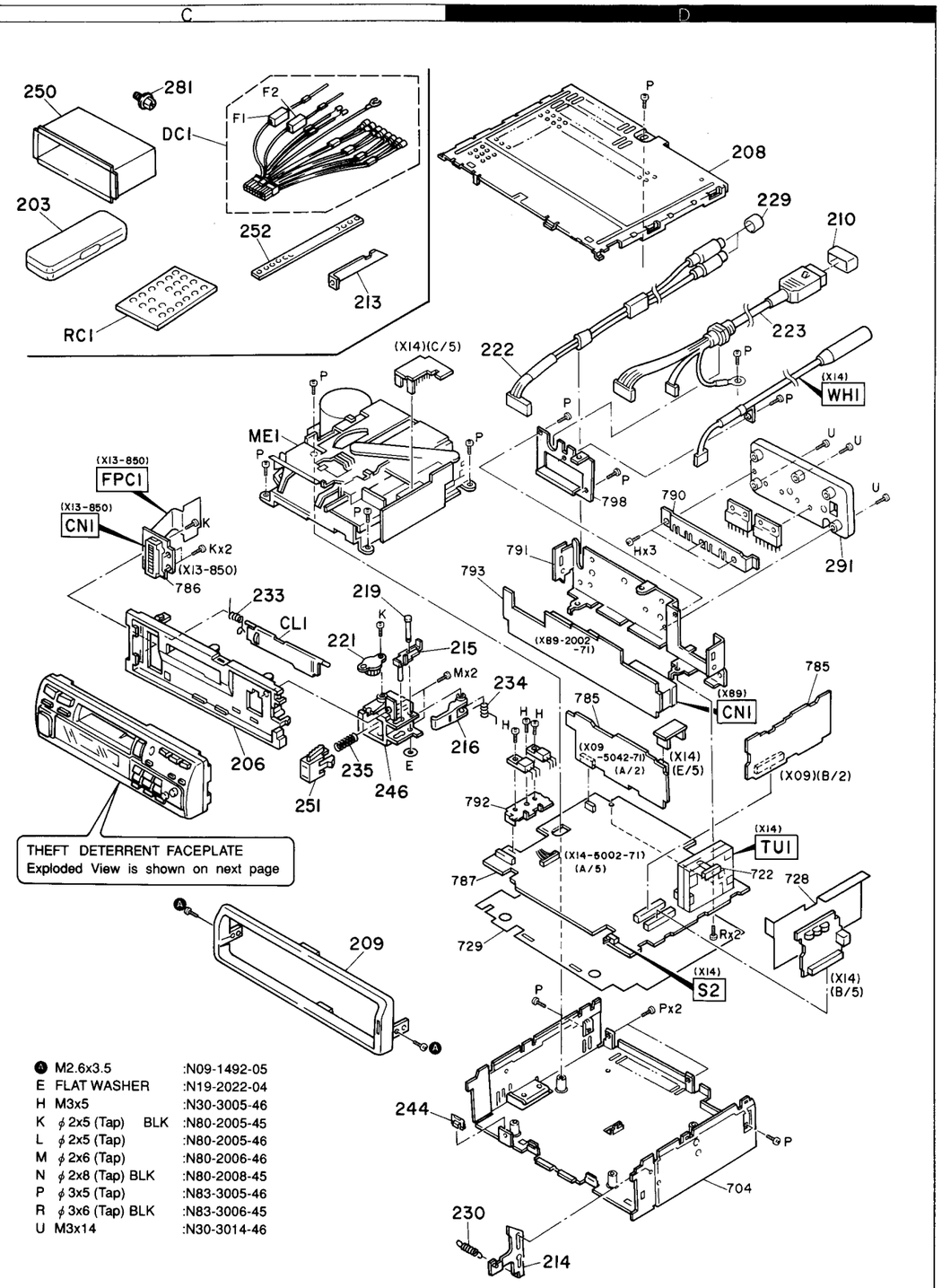

A	M2.6x3.5	:N09-1492-05
E	FLAT WASHER	:N19-2022-04
H	M3x5	:N30-3005-46
K	ϕ2x5 (Tap) BLK	:N80-2005-45
L	ϕ2x5 (Tap)	:N80-2005-46
M	ϕ2x6 (Tap)	:N80-2006-46
N	ϕ2x8 (Tap) BLK	:N80-2008-45
P	ϕ3x5 (Tap)	:N83-3005-46
R	ϕ3x6 (Tap) BLK	:N83-3006-45
U	M3x14	:N30-3014-46

Parts with the exploded numbers larger than 700 are not supplied.

EXPLODED VIEW (FACEPLATE)

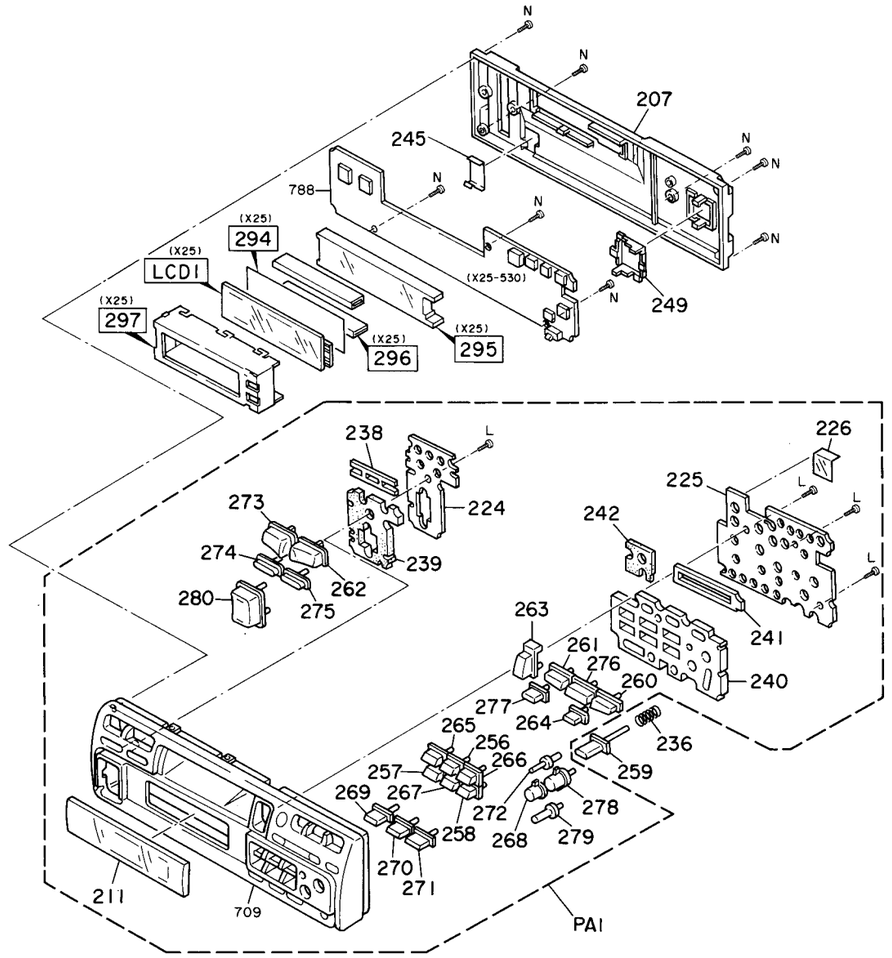

L	ϕ2x5 (Tap)	:N80-2005-46
N	ϕ2x8 (Tap) BLK	:N80-2008-45

Parts with the exploded numbers larger than 700 are not supplied.

KRC-95

× New Parts
Parts without P
Les articles non
Teile ohne Parts

Ref. No. 参照番号
203
206
207
208
CL1
PA1
RC1
209
210
211
-
-
-
-
-
213
214
215
216
219
221
222
223
DC1
224
225
226
229
F1, 2
230
233
234
235
236
238
239
240
241
242
-
-
-
-
-
-
244
245
246
249
250

E : Europe W
K : U.S.A. and Ca

EXPLODED VIEW (FACEPLATE)

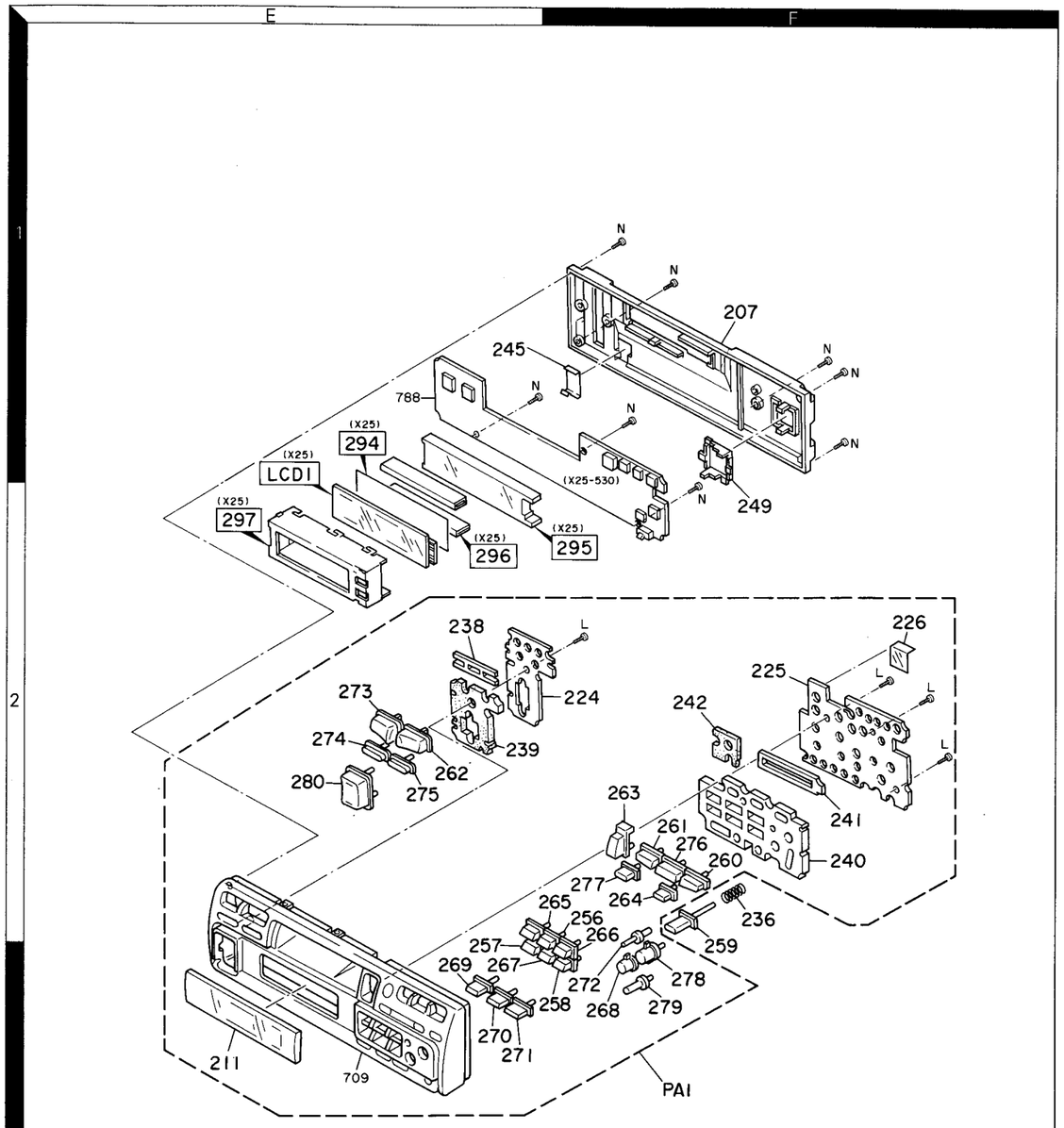

L ϕ2x5 (Tap) :N80-2005-46
N ϕ2x8 (Tap) BLK :N80-2008-45

Parts with the exploded numbers larger than 700 are not supplied.

KRC-954R

PARTS LIST

* New Parts
Parts without **Parts No.** are not supplied.
Les articles non mentionnes dans le **Parts No.** ne sont pas fournis.
Teile ohne **Parts No.** werden nicht geliefert.

Ref. No. 参照番号	Address 位置	New Parts 新	Parts No. 部品番号	Description 部品名／規格	Destination 仕向	Remarks 備考
			KRC-954R			
203	1C		A02-1421-01	PLASTIC CABINET		
206	2C	*	A22-1212-11	SUB PANEL		
207	1F		A46-1213-01	REAR COVER		
208	1D	*	A52-0656-02	TOP COVER		
CL1	2C	*	A53-1563-03	CASSETTE LID		
PA1	3F	*	A64-0049-02	PANEL ASSY		
RC1	1C		A70-0827-05	REMOTE CONTROLLER ASSY		
209	3C		B07-2034-01	ESCUTCHEON		
210	1D		B09-0062-05	CAP		
211	3E	*	B10-1543-03	FRONT GLASS		
-			B46-0100-20	WARRANTY CARD		
-		*	B46-0608-04	ID CARD		
-			B58-1217-04	CAUTION CARD		
-		*	B64-0245-00	INSTRUCTION MANUAL		
-		*	B64-0246-00	INSTRUCTION MANUAL		
-		*	B64-0247-00	INSTRUCTION MANUAL		
213	1C		D10-2548-14	LEVER		
214	3D		D10-2684-24	LEVER		
215	2C		D10-2776-14	LEVER ASSY		
216	2C		D10-2778-24	ARM		
219	2C		D21-2127-04	SHAFT		
221	2C		D39-0211-05	DAMPER		
222	1D	*	E30-4034-05	AUDIO CORD		
223	1D	*	E30-4078-05	CORD WITH CONNECTOR		
DC1	1C	*	E30-4036-05	DC CORD ASSY		
224	2E		F09-1211-04	SHEET		
225	2F		F09-1212-03	SHEET		
226	2F		F09-1213-04	SHEET		
229	1D		F29-0049-05	INSULATING COVER		
F1, 2	1C		F06-5024-05	FUSE (5A)		
230	3D		G01-2040-04	EXTENSION SPRING		
233	2C		G01-2525-04	TORSION COIL SPRING		
234	2D		G01-2632-24	TORSION COIL SPRING		
235	2C		G01-2633-04	COMPRESSION SPRING		
236	2F		G01-2645-04	COMPRESSION SPRING		
238	2E		G11-1585-04	CUSHION		
239	2E		G11-1586-04	CUSHION		
240	2F		G11-1589-03	CUSHION		
241	2F		G11-1590-03	CUSHION		
242	2F		G11-1591-03	CUSHION		
-			H10-4431-02	POLYSTYRENE FOAMED FIXTURE		
-			H25-0329-04	PROTECTION BAG (280X450X0.03)		
-			H25-0334-04	PROTECTION BAG (125X250X0.03)		
-			H25-0337-04	PROTECTION BAG (180X300X0.03)		
-		*	H54-0016-04	ITEM CARTON CASE		
-		*	H64-0020-04	OUTER CARTON CASE		
244	3D		J19-4431-14	LEAD HOLDER		
245	1F		J19-4435-04	LEAD HOLDER		
246	2C		J19-4466-22	HOLDER		
249	1F		J21-7409-04	MOUNTING HARDWARE		
250	1C		J21-7425-11	MOUNTING HARDWARE		

E : Europe **W** : Without Europe **P** : Canada **X** : Australia
K : U.S.A. and Canada **M** : Without Europe, U.S.A. and Canada

⚠ indicates safety critical components.

PARTS LIST

* New Parts
Parts without **Parts No.** are not supplied.
Les articles non mentionnes dans le **Parts No.** ne sont pas fournis.
Teile ohne **Parts No.** werden nicht geliefert.

KRC-954R

Ref. No. 参照番号	Address 位置	New Parts 新	Parts No. 部品番号	Description 部品名／規格			Destination 仕向	Remarks 備考
251	2C		J52-0037-14	MAGNET CATCH				
252	1C		J54-0059-04	STAY				
256	2F		K24-1177-04	KNOB (2, SCN)				
257	3E		K24-1179-04	KNOB (4, REP)				
258	3F		K24-1181-04	KNOB (6, M.RDM)				
259	3F		K24-1197-04	KNOB (OPEN)				
260	2F		K24-1255-04	KNOB (>>|+)				
261	2F		K24-1256-04	KNOB (-|<<)				
262	2E		K24-1262-04	KNOB (ATT)				
263	2F		K24-1266-04	KNOB (EJECT)				
264	2F		K24-1270-04	KNOB (AUTO)				
265	2F		K24-1271-04	KNOB (1, B.CNR)				
266	3F		K24-1272-04	KNOB (3, RDM)				
267	3E		K24-1273-04	KNOB (5, D.S)				
268	3F		K24-1274-04	KNOB (PRO)				
269	3E		K24-1275-04	KNOB (LO.S)				
270	3E		K24-1276-04	KNOB (-AM)				
271	3E		K24-1277-04	KNOB (FM+)				
272	3F		K24-1278-04	KNOB (RESET)				
273	2E	*	K24-1279-04	KNOB (AUDIO)				
274	2E	*	K24-1280-04	KNOB (ILLUM)				
275	2E	*	K24-1281-04	KNOB (K2I)				
276	2F	*	K24-1282-04	KNOB (RDS)				
277	2F	*	K24-1284-04	KNOB (TI)				
278	3F	*	K24-1286-04	KNOB (SRC)				
279	3F		K24-1287-04	KNOB (DISP)				
280	2E		K25-0624-04	KNOB (VOL)				
281	1C		N09-1885-05	SEMS (MACHINE SCREW)				
A	3C		N09-1492-05	MACHINE SCREW (2.6X3.5)				
E	2C		N19-2022-04	FLAT WASHER				
H	2D		N30-3005-46	PAN HEAD MACHINE SCREW				
K	2C		N80-2005-45	PAN HEAD TAPTITE SCREW				
L	2F		N80-2005-46	PAN HEAD TAPTITE SCREW				
M	2C		N80-2006-46	PAN HEAD TAPTITE SCREW				
N	1F		N80-2008-45	PAN HEAD TAPTITE SCREW				
P	1C,3D		N83-3005-46	PAN HEAD TAPTITE SCREW				
ME1	2C	*	X92-1710-06	MECHANISM ASSY				
AUDIO UNIT (X09-5042-71)								
C1 -4			CC73FSL1H821J	CHIP C	820PF	J		
C5 -8			CC73FCH1H101J	CHIP C	100PF	J		
C9 ,10			CE04CW0J330M	ELECTRO	33UF	6.3WV		
C11 ,12			C91-2040-05	CERAMIC	0.010UF	Z		
C13			C90-2595-05	ELECTRO	4.7UF	16WV		
C14			CE04CW1A101M	ELECTRO	100UF	10WV		
C16			CE04CW0J101M	ELECTRO	100UF	6.3WV		
C17 ,18			C90-2536-05	ELECTRO	10UF	16WV		
C19 ,20			C93-1044-05	CERAMIC	2200PF	K		
C21 -24			C90-2532-05	ELECTRO	1UF	16WV		
C25 -28			CK73EB1E104K	CHIP C	0.10UF	K		
C29 -34			C93-1044-05	CERAMIC	2200PF	K		
C35			CE04CW1A220M	ELECTRO	22UF	10WV		
C36			CE04CW1A470M	ELECTRO	47UF	10WV		
C37			CE04CW1H010M	ELECTRO	1.0UF	50WV		

E : Europe **W** : Without Europe **P** : Canada **X** : Australia
K : U.S.A. and Canada **M** : Without Europe, U.S.A. and Canada

⚠ indicates safety critical components.

KRC-954R

PARTS LIST

× New Parts
Parts without **Parts No.** are not supplied.
Les articles non mentionnes dans le **Parts No.** ne sont pas fournis.
Teile ohne **Parts No.** werden nicht geliefert.

AUDIO UNIT (X09-5042-71)

Ref. No. 参照番号	Address 位置	New Parts 新	Parts No. 部品番号	Description 部品名／規格	Destination 仕向	Remarks 備考
C38			CE04CW1A470M	ELECTRO 47UF 10WV		
C39			CE04CW1A220M	ELECTRO 22UF 10WV		
C40			CE04CW1A101M	ELECTRO 100UF 10WV		
C41 ,42			C90-2535-05	ELECTRO 4.7UF 16WV		
C45 ,46			C90-2536-05	ELECTRO 10UF 16WV		
C101-104			C90-2555-05	ELECTRO 4.7UF 25WV		
C105			C90-2550-05	ELECTRO 100UF 10WV		
C107,108			CK73FB1H152K	CHIP C 1500PF K		
C109,110			CK73EB1E104K	CHIP C 0.10UF K		
C111,112			C90-2555-05	ELECTRO 4.7UF 25WV		
C113,114			CC73FSL1H102J	CHIP C 1000PF J		
C115-122			C90-2555-05	ELECTRO 4.7UF 25WV		
C125,126			CK73EB1H473K	CHIP C 0.047UF K		
C129,130			CK73FB1H391K	CHIP C 390PF K		
C131			CK73EB1E223K	CHIP C 0.022UF K		
C132			CK73FB1H223KTA	CHIP C 0.022UF K		
C133			CK73FB1H561K	CHIP C 560PF K		
C134			CK73FB1H223KTA	CHIP C 0.022UF K		
C135			CK73FB1H103K	CHIP C 0.010UF K		
C139-142			C90-2555-05	ELECTRO 4.7UF 25WV		
C143-146			CK73FB1H392K	CHIP C 3900PF K		
C147,148			C90-2554-05	ELECTRO 10UF 16WV		
C151			C90-2553-05	ELECTRO 22UF 6.3WV		
C155			CK73FB1H103K	CHIP C 0.010UF K		
C159,160			C90-2554-05	ELECTRO 10UF 16WV		
C161			C90-2549-05	ELECTRO 22UF 6.3WV		
C162			C90-2554-05	ELECTRO 10UF 16WV		
CN1			E40-9102-05	SOCKET FOR PIN ASSY		
CN2		*	E40-9098-05	SOCKET FOR PIN ASSY		
CN3			E40-5461-05	SOCKET FOR PIN ASSY		
CN4			E40-3261-05	PIN ASSY		
CN11			E40-9096-05	SOCKET FOR PIN ASSY		
CN12		*	E40-9094-05	SOCKET FOR PIN ASSY		
CN14		*	E40-9091-05	SOCKET FOR PIN ASSY		
CN15			E40-3301-05	PIN ASSY		
TP1			E40-9218-05	PIN ASSY		
R1 -4			RK73FB2A393J	CHIP R 39K J 1/10W		
R5 ,6			RK73FB2A151J	CHIP R 150 J 1/10W		
R7 ,8			RK73FB2A303J	CHIP R 30K J 1/10W		
R9 ,10			RK73FB2A334J	CHIP R 330K J 1/10W		
R11 ,12			RK73FB2A123J	CHIP R 12K J 1/10W		
R13			RK73FB2A473J	CHIP R 47K J 1/10W		
R16			RK73FB2A103J	CHIP R 10K J 1/10W		
R17			RK73FB2A331J	CHIP R 330 J 1/10W		
R19 ,20			RK73FB2A473J	CHIP R 47K J 1/10W		
R21 ,22			RK73FB2A222J	CHIP R 2.2K J 1/10W		
R23 ,24			RK73FB2A332J	CHIP R 3.3K J 1/10W		
R25 ,26			RK73FB2A561J	CHIP R 560 J 1/10W		
R27 -30			RK73FB2A223J	CHIP R 22K J 1/10W		
R34			RK73FB2A183J	CHIP R 18K J 1/10W		
R35 ,36			RK73FB2A562J	CHIP R 5.6K J 1/10W		
R37 ,38			RK73FB2A152J	CHIP R 1.5K J 1/10W		
R101,102			RK73FB2A472J	CHIP R 4.7K J 1/10W		
R103,104			RK73FB2A222J	CHIP R 2.2K J 1/10W		

E : Europe **W** : Without Europe **P** : Canada **X** : Australia
K : U.S.A. and Canada **M** : Without Europe, U.S.A. and Canada

⚠ indicates safety critical components.

PARTS LIST

× New Parts
Parts without **Parts No.** are not supplied.
Les articles non mentionnes dans le **Parts No.** ne sont pas fournis.
Teile ohne **Parts No.** werden nicht geliefert.

AUDIO UNIT (X09-5042-71)

Ref. No. 参照番号	Address 位置	New Parts 新	Parts No. 部品番号	Description 部品名／規格	Destination 仕向	Remarks 備考
R105,106			RK73FB2A472J	CHIP R 4.7K J 1/10W		
R107,108			RK73FB2A822J	CHIP R 8.2K J 1/10W		
R109,110			RK73FB2A204J	CHIP R 200K J 1/10W		
R111,112			RK73FB2A224J	CHIP R 220K J 1/10W		
R113-116			RK73FB2A222J	CHIP R 2.2K J 1/10W		
R117,118			RK73FB2A224J	CHIP R 220K J 1/10W		
R119,120			RK73FB2A331J	CHIP R 330 J 1/10W		
R121			RK73FB2A473J	CHIP R 47K J 1/10W		
R122			RK73EB2B473J	CHIP R 47K J 1/8W		
R127,128			RK73FB2A271J	CHIP R 270 J 1/10W		
R129,130			RK73FB2A473J	CHIP R 47K J 1/10W		
R131			RK73FB2A103J	CHIP R 10K J 1/10W		
R132			RK73FB2A564J	CHIP R 560K J 1/10W		
R133-136			RK73FB2A224J	CHIP R 220K J 1/10W		
R141-144			RK73FB2A102J	CHIP R 1.0K J 1/10W		
R145,146			RK73FB2A101J	CHIP R 100 J 1/10W		
R151,152			RK73FB2A472J	CHIP R 4.7K J 1/10W		
R161,162			RK73FB2A512J	CHIP R 5.1K J 1/10W		
R163,164			RK73FB2A622J	CHIP R 6.2K J 1/10W		
R165			RK73FB2A102J	CHIP R 1.0K J 1/10W		
R166			RK73FB2A103J	CHIP R 10K J 1/10W		
R167			RK73FB2A223J	CHIP R 22K J 1/10W		
VR1 ,2			R12-3100-05	TRIMMING POT.(10K タテ)		
W3			R92-2053-05	CHIP R 0 J 1/8W		
D1 -3			MA110	DIODE		
D1 -3			1SS355	DIODE		
D4 ,5			ERA15-01	DIODE		
D11			DAP202K	DIODE		
D12			MA8062-M	ZENER DIODE		
IC1			TA7705F	IC(PREAMP FOR AUTO REVERSE)		
IC2			HA12161FP	IC		
IC3			M5280FP	IC(ISO AMP)		
IC4			NJM4565MD	IC(OP AMP X2)		
IC11			TC9233FK	IC		
IC12-18			NJM4565MD	IC(OP AMP X2)		
Q1 ,2			2SD1757K	TRANSISTOR		
Q11 ,12			2SD1757K	TRANSISTOR		
SUB-CIRCUIT UNIT (X13-6410-03)						
C1			CF92V1H224J	MF 0.22UF J		
CN1			E40-9100-05	SOCKET FOR PIN ASSY		
CN2			E40-5065-05	PIN ASSY		
CN3			E40-9115-05	FLAT CABLE CONNCTOR		
J1 ,2			E31-8052-05	LEAD WIRE		
S1			S40-1140-05	PUSH SWITCH		
S2 -4			S46-1601-05	LEAF SWITCH		
PH1 ,2			T95-0201-05	OPTO ISOLATOR		
PH3			T95-0202-05	OPTO ISOLATOR		
SUB-CIRCUIT UNIT (X13-8502-71)						
D1			B30-1393-05	LED		
PL1 ,2		*	B30-1406-05	LAMP		
CN1	2C		E58-0818-05	RECTANGULAR RECEPTACLE		

E : Europe **W** : Without Europe **P** : Canada **X** : Australia
K : U.S.A. and Canada **M** : Without Europe, U.S.A. and Canada

⚠ indicates safety critical components.

KRC-954R

PARTS LIST

* New Parts
Parts without **Parts No.** are not supplied.
Les articles non mentionnes dans le **Parts No.** ne sont pas fournis.
Teile ohne **Parts No.** werden nicht geliefert.

SUB-CIRCUIT UNIT (X13-8502-71)

Ref. No. 参照番号	Address 位置	New Parts 新	Parts No. 部品番号	Description 部品名／規格	Destination 仕向	Remarks 備考
FPC1	2C		J84-0037-03	FLEXIBLE PRINTED WIRING BOARD		
D2 -10			MA8062-M	ZENER DIODE		
SYNTHESIZER UNIT (X14-5002-71)						
D502		*	B30-1405-05	LED		
C1		*	C90-2791-05	ALMINIUM ELECTROLYTIC C.		
C2			C90-2688-05	ALMINIUM ELECTROLYTIC C.		
C3 ,4			CK73EB1H104K	CHIP C 0.10UF K		
C5 ,6			CK73FB1H103K	CHIP C 0.010UF K		
C7			CE04CW0J220M	ELECTRO 22UF 6.3WV		
C8			CK73FB1H223KTA	CHIP C 0.022UF K		
C9 ,10			CC73FCH1H270J	CHIP C 27PF J		
C11			CE04CW1A101M	ELECTRO 100UF 10WV		
C13 ,14			CK73FB1H223KTA	CHIP C 0.022UF K		
C15			CK73EB1E683K	CHIP C 0.068UF K		
C17 ,18			CK73FB1H153KTA	CHIP C 0.015UF K		
C19 ,20			CK73FB1H332K	CHIP C 3300PF K		
C21			CK73EB1E823K	CHIP C 0.082UF K		
C22			CE04CW1A101M	ELECTRO 100UF 10WV		
C23			C90-2525-05	NP-ELECT 2.2UF 35WV		
C24			CK73FB1H223KTA	CHIP C 0.022UF K		
C25			CK73FB1H103K	CHIP C 0.010UF K		
C26			CE04CW1A101M	ELECTRO 100UF 10WV		
C27			CF92V1H332J	MF 3300PF J		
C28		*	C91-2042-05	CERAMIC 0.015UF Z		
C29			CK73FB1H223KTA	CHIP C 0.022UF K		
C30 ,31			CC73FSL1H102J	CHIP C 1000PF J		
C34			CK73FB1H103K	CHIP C 0.010UF K		
C35			CK73FB1H102K	CHIP C 1000PF K		
C36			CE04CW1A220M	ELECTRO 22UF 10WV		
C37			CE04CW0J220M	ELECTRO 22UF 6.3WV		
C38			C90-2592-05	ELECTRO 10UF 6.3WV		
C39			C90-2606-05	ELECTRO 0.47UF 50WV		
C40			C92-0005-05	ELECTRO 2.2UF 6.3WV		
C41			C93-0025-05	CERAMIC 0.22UF K		
C42			CK73EB1E563K	CHIP C 0.056UF K		
C43			CK73FB1H103K	CHIP C 0.010UF K		
C44			CK73FB1H102K	CHIP C 1000PF K		
C45			CC73FCH1H270J	CHIP C 27PF J		
C46 ,47			C90-2592-05	ELECTRO 10UF 6.3WV		
C48			C92-0005-05	ELECTRO 2.2UF 6.3WV		
C49 ,50			CK73FB1H103K	CHIP C 0.010UF K		
C51			CK73FB1H561K	CHIP C 560PF K		
C52			CC73FCH1H820J	CHIP C 82PF J		
C53			CC73FCH1H470J	CHIP C 47PF J		
C54			CE04CW0J220M	ELECTRO 22UF 6.3WV		
C55 ,56			CK73FB1H223KTA	CHIP C 0.022UF K		
C57			CE04CW1C470M	ELECTRO 47UF 16WV		
C58			CK73FB1H223KTA	CHIP C 0.022UF K		
C59 ,60			CK73FB1H103K	CHIP C 0.010UF K		
C61 ,62			C93-0025-05	CERAMIC 0.22UF K		
C63			CK73FB1H223KTA	CHIP C 0.022UF K		
C64			CE04MW1A101M	ELECTRO 100UF 10WV		
C65			C90-2608-05	ELECTRO 1.0UF 50WV		

E : Europe **W** : Without Europe **P** : Canada **X** : Australia
K : U.S.A. and Canada **M** : Without Europe, U.S.A. and Canada

⚠ indicates safety critical components.

PARTS LIST

× New Parts
Parts without **Parts No.** are not supplied.
Les articles non mentionnes dans le **Parts No.** ne sont pas fournis.
Teile ohne **Parts No.** werden nicht geliefert.

SYNTHESIZER UNIT (X14-5002-71)

Ref. No. 参照番号	Address 位置	New Parts 新	Parts No. 部品番号	Description 部品名／規格			Destination 仕向	Remarks 備考
C66			CK73FB1H223KTA	CHIP C	0.022UF	K		
C67			CK73FB1H103K	CHIP C	0.010UF	K		
C69			CK73FB1E473KTA	CHIP C	0.047UF	K		
C70			C90-2594-05	ELECTRO	10UF	10WV		
C71			C90-2592-05	ELECTRO	10UF	6.3WV		
C72			CK73EB1E104K	CHIP C	0.10UF	K		
C73			CK73FB1H103K	CHIP C	0.010UF	K		
C74 ,75			C90-1770-05	ELECTRO	220UF	16VW		
C76 -79			C90-2551-05	ELECTRO	33UF	10WV		
C80 -83			C90-2555-05	ELECTRO	4.7UF	25WV		
C84			C90-2595-05	ELECTRO	4.7UF	16WV		
C85			C90-2532-05	ELECTRO	1UF	16WV		
C86 -89			CK73FB1H103K	CHIP C	0.010UF	K		
C90 -93			CK73FB1H562K	CHIP C	5600PF	K		
C94 -97			CK73EB1E683K	CHIP C	0.068UF	K		
C98			CK73FB1H103K	CHIP C	0.010UF	K		
C99			C90-2595-05	ELECTRO	4.7UF	16WV		
C100,101			CK73FB1H103K	CHIP C	0.010UF	K		
C102			CE04CW0J220M	ELECTRO	22UF	6.3WV		
C103			CK73FB1H223KTA	CHIP C	0.022UF	K		
C104			C90-2608-05	ELECTRO	1.0UF	50WV		
C106,107			CC73FCH1H100D	CHIP C	10PF	D		
C108			CE04CW0J101M	ELECTRO	100UF	6.3WV		
C109			CK73FB1H223KTA	CHIP C	0.022UF	K		
C111			CK73FB1H223KTA	CHIP C	0.022UF	K		
C112			CK73FB1H103K	CHIP C	0.010UF	K		
C114			CK73FB1H223KTA	CHIP C	0.022UF	K		
C115			CK73FB1H103K	CHIP C	0.010UF	K		
C116			CE04CW0J470M	ELECTRO	47UF	6.3WV		
C117			CK73FB1H331K	CHIP C	330PF	K		
C118			CK73FB1E333KTA	CHIP C	0.033UF	K		
C119			CK73FB1H102K	CHIP C	1000PF	K		
C120,121			CK73FB1H103K	CHIP C	0.010UF	K		
C501			CK73FB1H103K	CHIP C	0.010UF	K		
C502			C92-0005-05	ELECTRO	2.2UF	6.3WV		
C503			CK73FB1H103K	CHIP C	0.010UF	K		
C504			CK73FB1H182K	CHIP C	1800PF	K		
C505			CK73FB1H103K	CHIP C	0.010UF	K		
C506			CE04DW1A101M	ELECTRO	100UF	10WV		
C507			CK73FB1H223KTA	CHIP C	0.022UF	K		
C508			CC73FCH1H070D	CHIP C	7PF	D		
C509			CK73EB1E104K	CHIP C	0.10UF	K		
C510			CK73EB1E823K	CHIP C	0.082UF	K		
C511			C92-0005-05	ELECTRO	2.2UF	6.3WV		
C512			CK73EB1H223K	CHIP C	0.022UF	K		
C513			CC73FCH1H101J	CHIP C	100PF	J		
C514			CK73FB1H471K	CHIP C	470PF	K		
C515			C92-0005-05	ELECTRO	2.2UF	6.3WV		
C516			CK73EB1E104K	CHIP C	0.10UF	K		
C517			C92-0004-05	ELECTRO	1.0UF	16WV		
C518			C92-0003-05	CHIP TAN	0.47UF	25WV		
C519			CE04NW1A101M	ELECTRO	100UF	10WV		
C520			CK73EB1E473K	CHIP C	0.047UF	K		
C521			CK73EB1E104K	CHIP C	0.10UF	K		
C522,523			CE04NW1C100M	ELECTRO	10UF	16WV		

E : Europe **W** : Without Europe **P** : Canada **X** : Australia
K : U.S.A. and Canada **M** : Without Europe, U.S.A. and Canada

⚠ indicates safety critical components.

KRC-954R

PARTS LIST

＊ New Parts
Parts without **Parts No.** are not supplied.
Les articles non mentionnes dans le **Parts No.** ne sont pas fournis.
Teile ohne **Parts No.** werden nicht geliefert.

SYNTHESIZER UNIT (X14-5002-71)

Ref. No. 参照番号	Address 位置	New Parts 新	Parts No. 部品番号	Description 部品名／規格	Destination 仕向	Remarks 備考
C524			CK73EB1E473K	CHIP C 0.047UF K		
C525,526			CK73EB1E104K	CHIP C 0.10UF K		
C527			CK73FB1H222K	CHIP C 2200PF K		
C528			CK73FB1H472K	CHIP C 4700PF K		
C529			CK73EB1E104K	CHIP C 0.10UF K		
C530			CK73FB1E473KTA	CHIP C 0.047UF K		
C531,532			CK73EB1E104K	CHIP C 0.10UF K		
C534			CK73FB1H103K	CHIP C 0.010UF K		
CN1		*	E40-9249-05	FLAT CABLE CONNCTOR		
CN2		*	E40-9085-05	PIN ASSY		
CN3			E40-9083-05	PIN ASSY		
CN4		*	E40-9079-05	PIN ASSY		
CN5			E40-9077-05	PIN ASSY		
CN7		*	E40-9075-05	PIN ASSY		
CN50		*	E40-9104-05	SOCKET FOR PIN ASSY		
CN51			E40-5452-05	PIN ASSY		
CN52			E40-9081-05	PIN ASSY		
CN55,56		*	E40-9072-05	PIN ASSY		
TP1			E40-3445-15	SOCKET FOR PIN ASSY		
TP2			E23-0136-05	TERMINAL		
WH1	1D	*	E30-4069-05	CORD WITH PLUG (ANT)		
WH2			E31-8202-05	WIRING HARNESS		
291	2D	*	F01-1363-23	HEAT SINK		
LH1			J19-2826-05	HOLDER		
CF1			L72-0716-05	CERAMIC FILTER		
CF2			L72-0715-05	CERAMIC FILTER		
CF3		*	L72-0721-05	CERAMIC FILTER		
L1			L40-4791-31	SMALL FIXED INDUCTOR(4.7UH)		
L2			L40-4791-16	SMALL FIXED INDUCTOR(4.7UH,K)		
L3			L40-5681-17	SMALL FIXED INDUCTOR		
L4 ,5			L40-4791-31	SMALL FIXED INDUCTOR(4.7UH)		
L6			L40-4791-11	SMALL FIXED INDUCTOR		
L7			L40-1011-31	SMALL FIXED INDUCTOR(100UH)		
L8 ,9			L40-4791-31	SMALL FIXED INDUCTOR(4.7UH)		
L14			L40-4791-31	SMALL FIXED INDUCTOR(4.7UH)		
L501			L40-1021-14	SMALL FIXED INDUCTOR(1.0MH,K)		
L502			L40-4791-31	SMALL FIXED INDUCTOR(4.7UH)		
T1			L30-0462-15	FM IFT		
X1			L77-1166-05	CRYSTAL RESONATOR		
X2			L77-2002-05	CRYSTAL RESONATOR(4.3320MHZ)		
X3			L78-0503-05	RESONATOR (4.00MHZ)		
X4			L77-2003-05	CRYSTAL RESONATOR(8.388608MHZ)		
X5			L78-0267-05	RESONATOR (4.19MHZ)		
X11		*	L78-0526-05	RESONATOR		
H	2D		N30-3005-46	PAN HEAD MACHINE SCREW		
P	1D		N83-3005-46	PAN HEAD TAPTITE SCREW		
R	3D		N83-3006-45	PAN HEAD TAPTITE SCREW		
U	2D		N30-3014-46	PAN HEAD MACHINE SCREW		
R1 -4			RK73FB2A223J	CHIP R 22K J 1/10W		
R5 ,6			RK73FB2A183J	CHIP R 18K J 1/10W		
R7			RK73FB2A392J	CHIP R 3.9K J 1/10W		
R8			RK73FB2A222J	CHIP R 2.2K J 1/10W		
R9 ,10			RK73FB2A472J	CHIP R 4.7K J 1/10W		

E : Europe **W** : Without Europe **P** : Canada **X** : Australia
K : U.S.A. and Canada **M** : Without Europe, U.S.A. and Canada

⚠ indicates safety critical components.

PARTS LIST

＊ New Parts
Parts without **Parts No.** are not supplied.
Les articles non mentionnes dans le **Parts No.** ne sont pas fournis.
Teile ohne **Parts No.** werden nicht geliefert.

SYNTHESIZER UNIT (X14-5002-71)

Ref. No. 参照番号	Address 位置	New Parts 新	Parts No. 部品番号	Description 部品名／規格	Destination 仕向	Remarks 備考
R11 ,12			RK73FB2A104J	CHIP R 100K J 1/10W		
R13			RK73FB2A152J	CHIP R 1.5K J 1/10W		
R14			RK73FB2A431J	CHIP R 430 J 1/10W		
R15			RK73FB2A330J	CHIP R 33 J 1/10W		
R16			RK73FB2A271J	CHIP R 270 J 1/10W		
R17 ,18			RK73FB2A331J	CHIP R 330 J 1/10W		
R19 -21			RK73FB2A102J	CHIP R 1.0K J 1/10W		
R22 ,23			RK73FB2A222J	CHIP R 2.2K J 1/10W		
R24 -26			RK73FB2A472J	CHIP R 4.7K J 1/10W		
R27			RK73FB2A331J	CHIP R 330 J 1/10W		
R28			RK73FB2A183J	CHIP R 18K J 1/10W		
R29			RK73FB2A102J	CHIP R 1.0K J 1/10W		
R30 ,31			RK73FB2A103J	CHIP R 10K J 1/10W		
R32 ,33			RK73FB2A222J	CHIP R 2.2K J 1/10W		
R34			RK73EB2B100J	CHIP R 10 J 1/8W		
R35 ,36			RK73FB2A752J	CHIP R 7.5K J 1/10W		
R37 ,38			RK73FB2A472J	CHIP R 4.7K J 1/10W		
R39			RK73FB2A912J	CHIP R 9.1K J 1/10W		
R40			RK73FB2A223J	CHIP R 22K J 1/10W		
R41			RK73FB2A102J	CHIP R 1.0K J 1/10W		
R42			RK73FB2A222J	CHIP R 2.2K J 1/10W		
R43			RK73FB2A332J	CHIP R 3.3K J 1/10W		
R44			RK73FB2A272J	CHIP R 2.7K J 1/10W		
R45			RK73FB2A331J	CHIP R 330 J 1/10W		
R47			RK73FB2A432J	CHIP R 4.3K J 1/10W		
R48			RK73FB2A153J	CHIP R 15K J 1/10W		
R50			RK73FB2A113J	CHIP R 11K J 1/10W		
R51			RK73FB2A562J	CHIP R 5.6K J 1/10W		
R52			RK73FB2A223J	CHIP R 22K J 1/10W		
R54			RK73FB2A470J	CHIP R 47 J 1/10W		
R55			RK73FB2A331J	CHIP R 330 J 1/10W		
R56			RK73FB2A221J	CHIP R 220 J 1/10W		
R57 ,58			R92-2030-05	CHIP R 2.2K D 1/10W		
R59 ,60			R92-2034-05	CHIP R 10K D 1/10W		
R61 ,62			RK73FB2A103J	CHIP R 10K J 1/10W		
R63			RK73FB2A223J	CHIP R 22K J 1/10W		
R64			RK73FB2A104J	CHIP R 100K J 1/10W		
R65			RK73FB2A100J	CHIP R 10 J 1/10W		
R66			RK73FB2A102J	CHIP R 1.0K J 1/10W		
R67			RK73FB2A103J	CHIP R 10K J 1/10W		
R68			RK73FB2A223J	CHIP R 22K J 1/10W		
R69			RK73FB2A473J	CHIP R 47K J 1/10W		
R70 ,71			RK73FB2A223J	CHIP R 22K J 1/10W		
R72			RK73FB2A222J	CHIP R 2.2K J 1/10W		
R73			RK73FB2A102J	CHIP R 1.0K J 1/10W		
R74 ,75			RK73FB2A103J	CHIP R 10K J 1/10W		
R76			RK73FB2A472J	CHIP R 4.7K J 1/10W		
R77			RK73FB2A473J	CHIP R 47K J 1/10W		
R78			RK73FB2A303J	CHIP R 30K J 1/10W		
R79			RK73FB2A823J	CHIP R 82K J 1/10W		
R80			RK73EB2B101J	CHIP R 100 J 1/8W		
R81 ,82			RK73FB2A223J	CHIP R 22K J 1/10W		
R83			RK73FB2A224J	CHIP R 220K J 1/10W		
R84			RK73FB2A472J	CHIP R 4.7K J 1/10W		
R85			RK73FB2A304J	CHIP R 300K J 1/10W		

E : Europe **W** : Without Europe **P** : Canada **X** : Australia
K : U.S.A. and Canada **M** : Without Europe, U.S.A. and Canada

⚠ indicates safety critical components.

KRC-954R

PARTS LIST

* New Parts
Parts without **Parts No.** are not supplied.
Les articles non mentionnes dans le **Parts No.** ne sont pas fournis.
Teile ohne **Parts No.** werden nicht geliefert.

SYNTHESIZER UNIT (X14-5002-71)

Ref. No. 参照番号	Address 位置	New Parts 新	Parts No. 部品番号	Description 部品名／規格	Destination 仕向	Remarks 備考
R86			RK73FB2A332J	CHIP R 3.3K J 1/10W		
R87			RK73FB2A473J	CHIP R 47K J 1/10W		
R88			RK73FB2A102J	CHIP R 1.0K J 1/10W		
R89			RK73FB2A100J	CHIP R 10 J 1/10W		
R90 ,91			RK73FB2A102J	CHIP R 1.0K J 1/10W		
R95			RS14DB3D330J	FL-PROOF RS 33 J 2W		
R96			RK73FB2A222J	CHIP R 2.2K J 1/10W		
R97			RK73FB2A332J	CHIP R 3.3K J 1/10W		
R98 -106			RK73FB2A104J	CHIP R 100K J 1/10W		
R107			R92-2117-05	METAL FILM RESISTOR		
R108			R92-2033-05	CHIP RD R 5.1K D 1/10W		
R109			RK73FB2A101J	CHIP R 100 J 1/10W		
R110			RK73FB2A181J	CHIP R 180 J 1/10W		
R111			R92-2104-05	CHIP R 2.2 J 1W		
R112			RK73FB2A222J	CHIP R 2.2K J 1/10W		
R113			R92-2104-05	CHIP R 2.2 J 1W		
R114,115			RK73FB2A103J	CHIP R 10K J 1/10W		
R120-123			RK73FB2A184J	CHIP R 180K J 1/10W		
R124-131			RK73FB2A221J	CHIP R 220 J 1/10W		
R132-135			RK73FB2A102J	CHIP R 1.0K J 1/10W		
R136-139			RK73FB2A472J	CHIP R 4.7K J 1/10W		
R140			RK73FB2A154J	CHIP R 150K J 1/10W		
R141			RK73FB2A823J	CHIP R 82K J 1/10W		
R142			RK73FB2A473J	CHIP R 47K J 1/10W		
R143			RK73FB2A273J	CHIP R 27K J 1/10W		
R144			RK73FB2A102J	CHIP R 1.0K J 1/10W		
R145			RK73FB2A224J	CHIP R 220K J 1/10W		
R146			RK73FB2A104J	CHIP R 100K J 1/10W		
R147			RK73FB2A123J	CHIP R 12K J 1/10W		
R148-150			RK73FB2A103J	CHIP R 10K J 1/10W		
R151-155			RK73FB2A104J	CHIP R 100K J 1/10W		
R156,157			RK73FB2A473J	CHIP R 47K J 1/10W		
R158			RK73FB2A103J	CHIP R 10K J 1/10W		
R159-166			RK73FB2A101J	CHIP R 100 J 1/10W		
R167			RK73EB2B181J	CHIP R 180 J 1/8W		
R168			RK73FB2A103J	CHIP R 10K J 1/10W		
R169			RK73FB2A223J	CHIP R 22K J 1/10W		
R170			RK73FB2A472J	CHIP R 4.7K J 1/10W		
R171			R92-0365-05	CHIP R 1K J 1/2W		
R172			RK73EB2B103J	CHIP R 10K J 1/8W		
R173-176			RK73FB2A104J	CHIP R 100K J 1/10W		
R177,178			RK73FB2A134J	CHIP R 130K J 1/10W		
R179			RK73FB2A103J	CHIP R 10K J 1/10W		
R180			RK73FB2A431J	CHIP R 430 J 1/10W		
R181,182			RK73FB2A471J	CHIP R 470 J 1/10W		
R183,184			R92-0686-05	CHIP R 33 J 1/2W		
R185,186			RK73FB2A103J	CHIP R 10K J 1/10W		
R187,188			RK73FB2A102J	CHIP R 1.0K J 1/10W		
R189			RK73FB2A182J	CHIP R 1.8K J 1/10W		
R191			RK73FB2A104J	CHIP R 100K J 1/10W		
R193			RK73FB2A104J	CHIP R 100K J 1/10W		
R198,199			RK73FB2A102J	CHIP R 1.0K J 1/10W		
R200-202			RK73FB2A103J	CHIP R 10K J 1/10W		
R206,207			RK73FB2A472J	CHIP R 4.7K J 1/10W		
R208			RK73FB2A222J	CHIP R 2.2K J 1/10W		

E : Europe **W** : Without Europe **P** : Canada **X** : Australia
K : U.S.A. and Canada **M** : Without Europe, U.S.A. and Canada

⚠ indicates safety critical components.

PARTS LIST

* New Parts
Parts without **Parts No.** are not supplied.
Les articles non mentionnes dans le **Parts No.** ne sont pas fournis.
Teile ohne **Parts No.** werden nicht geliefert.

SYNTHESIZER UNIT (X14-5002-71)

Ref. No. 参照番号	Address 位置	New Parts 新	Parts No. 部品番号	Description 部品名／規格	Destination 仕向	Remarks 備考
R209-211			RK73FB2A102J	CHIP R 1.0K J 1/10W		
R212-215			RK73FB2A222J	CHIP R 2.2K J 1/10W		
R216			RK73FB2A472J	CHIP R 4.7K J 1/10W		
R217,218			RK73FB2A222J	CHIP R 2.2K J 1/10W		
R219			RK73FB2A472J	CHIP R 4.7K J 1/10W		
R220,221			RK73FB2A222J	CHIP R 2.2K J 1/10W		
R222			RK73FB2A102J	CHIP R 1.0K J 1/10W		
R223-227			RK73FB2A222J	CHIP R 2.2K J 1/10W		
R228			RK73FB2A472J	CHIP R 4.7K J 1/10W		
R229			RK73FB2A222J	CHIP R 2.2K J 1/10W		
R230-234			RK73FB2A102J	CHIP R 1.0K J 1/10W		
R235-238			RK73FB2A472J	CHIP R 4.7K J 1/10W		
R239-255			RK73FB2A222J	CHIP R 2.2K J 1/10W		
R256			RK73FB2A562J	CHIP R 5.6K J 1/10W		
R257,258			RK73FB2A222J	CHIP R 2.2K J 1/10W		
R259			RK73FB2A103J	CHIP R 10K J 1/10W		
R260			RK73FB2A222J	CHIP R 2.2K J 1/10W		
R261			RK73FB2A102J	CHIP R 1.0K J 1/10W		
R262			RK73FB2A222J	CHIP R 2.2K J 1/10W		
R263			RK73FB2A472J	CHIP R 4.7K J 1/10W		
R264-271			RK73FB2A222J	CHIP R 2.2K J 1/10W		
R272			RK73FB2A472J	CHIP R 4.7K J 1/10W		
R273-275			RK73FB2A222J	CHIP R 2.2K J 1/10W		
R276			RK73EB2B272J	CHIP R 2.7K J 1/8W		
R277,278			RK73FB2A272J	CHIP R 2.7K J 1/10W		
R279			RK73FB2A104J	CHIP R 100K J 1/10W		
R281-284			RK73FB2A104J	CHIP R 100K J 1/10W		
R287			RK73FB2A104J	CHIP R 100K J 1/10W		
R288			RK73FB2A473J	CHIP R 47K J 1/10W		
R290			RK73FB2A102J	CHIP R 1.0K J 1/10W		
R291			RK73FB2A222J	CHIP R 2.2K J 1/10W		
R292			RK73EB2B220J	CHIP R 22 J 1/8W		
R293-295			RK73FB2A222J	CHIP R 2.2K J 1/10W		
R296			RK73EB2B333J	CHIP R 33K J 1/8W		
R297			RK73EB2B222J	CHIP R 2.2K J 1/8W		
R299-307			RK73FB2A222J	CHIP R 2.2K J 1/10W		
R308-310			RK73EB2B222J	CHIP R 2.2K J 1/8W		
R311-316			RK73FB2A222J	CHIP R 2.2K J 1/10W		
R317			RK73FB2A472J	CHIP R 4.7K J 1/10W		
R318			RK73FB2A222J	CHIP R 2.2K J 1/10W		
R319-327			RK73FB2A104J	CHIP R 100K J 1/10W		
R329			RK73FB2A472J	CHIP R 4.7K J 1/10W		
R331			RK73FB2A471J	CHIP R 470 J 1/10W		
R332			RK73FB2A222J	CHIP R 2.2K J 1/10W		
R333			RK73FB2A471J	CHIP R 470 J 1/10W		
R350			RK73FB2A222J	CHIP R 2.2K J 1/10W		
R376			RK73FB2A104J	CHIP R 100K J 1/10W		
R378			RK73FB2A104J	CHIP R 100K J 1/10W		
R501			RK73FB2A391J	CHIP R 390 J 1/10W		
R502			RK73FB2A225J	CHIP R 2.2M J 1/10W		
R505,506			RK73FB2A183J	CHIP R 18K J 1/10W		
R507			RK73FB2A511J	CHIP R 510 J 1/10W		
R508			RK73FB2A105J	CHIP R 1.0M J 1/10W		
R509			RK73FB2A332J	CHIP R 3.3K J 1/10W		
R510			RK73FB2A563J	CHIP R 56K J 1/10W		

E : Europe **W** : Without Europe **P** : Canada **X** : Australia
K : U.S.A. and Canada **M** : Without Europe, U.S.A. and Canada

⚠ indicates safety critical components.

KRC-954R

PARTS LIST

* New Parts
Parts without **Parts No.** are not supplied.
Les articles non mentionnes dans le **Parts No.** ne sont pas fournis.
Teile ohne **Parts No.** werden nicht geliefert.

SYNTHESIZER UNIT (X14-5002-71)

Ref. No. 参照番号	Address 位置	New Parts 新	Parts No. 部品番号	Description 部品名／規格	Destination 仕向	Remarks 備考
R511,512			RK73FB2A103J	CHIP R 10K J 1/10W		
R513			RK73FB2A100J	CHIP R 10 J 1/10W		
R515			RK73FB2A823J	CHIP R 82K J 1/10W		
R516			RK73FB2A562J	CHIP R 5.6K J 1/10W		
R517			RK73FB2A334J	CHIP R 330K J 1/10W		
R518			RK73FB2A122J	CHIP R 1.2K J 1/10W		
R519			RK73FB2A472J	CHIP R 4.7K J 1/10W		
R520			RK73FB2A102J	CHIP R 1.0K J 1/10W		
R521			RK73FB2A683J	CHIP R 68K J 1/10W		
R522			RK73FB2A223J	CHIP R 22K J 1/10W		
R523			RK73FB2A242J	CHIP R 2.4K J 1/10W		
R524			RK73FB2A224J	CHIP R 220K J 1/10W		
R525,526			RK73FB2A104J	CHIP R 100K J 1/10W		
R527			RK73FB2A823J	CHIP R 82K J 1/10W		
R528			RK73FB2A274J	CHIP R 270K J 1/10W		
VR1			R12-0606-05	TRIMMING PØT.(330)		
VR2 ,3			R12-3685-05	TRIMMING PØT.(10K)		
VR11			R12-3685-05	TRIMMING PØT.(10K)		
VR12			R12-3103-05	TRIM PØT. 47K		
VR13			R12-3100-05	TRIMMING PØT.(10K)		
VR14			R12-3101-05	TRIMMING PØT.(22K)		
VR15			R12-3685-05	TRIMMING PØT.(10K)		
W8 -10			R92-2052-05	CHIP R 0 J 1/10W		
W12			R92-2052-05	CHIP R 0 J 1/10W		
W15			R92-2053-05	CHIP R 0 J 1/8W		
W43			R92-2052-05	CHIP R 0 J 1/10W		
W46			R92-2052-05	CHIP R 0 J 1/10W		
S2	2D		S40-1139-05	PUSH SWITCH (TDF)		
D1 ,2			MA8068-M	ZENER DIØDE		
D3			MA110	DIØDE		
D3			1SS355	DIØDE		
D4			DAP202K	DIØDE		
D5			DAN202K	DIØDE		
D6			DAP202K	DIØDE		
D7			DA204K	DIØDE		
D8 -11			MA110	DIØDE		
D8 -11			1SS355	DIØDE		
D12			MA8091-M	ZENER DIØDE		
D13			MA8056-M	ZENER DIØDE		
D14 ,15			MA110	DIØDE		
D14 ,15			1SS355	DIØDE		
D16			MA8110-L	ZENER DIØDE		
D17			MA8051-M	ZENER DIØDE		
D18			DA204K	DIØDE		
D19 -22			MA110	DIØDE		
D19 -22			1SS355	DIØDE		
D23			DAP202K	DIØDE		
D24			DAN202K	DIØDE		
D25			DAP202K	DIØDE		
D26 -28			MA110	DIØDE		
D26 -28			1SS355	DIØDE		
D29			ERA15-01	DIØDE		
D30			MA8062-M	ZENER DIØDE		

E : Europe **W** : Without Europe **P** : Canada **X** : Australia
K : U.S.A. and Canada **M** : Without Europe, U.S.A. and Canada

⚠ indicates safety critical components.

PARTS LIST

× New Parts
Parts without **Parts No.** are not supplied.
Les articles non mentionnes dans le **Parts No.** ne sont pas fournis.
Teile ohne **Parts No.** werden nicht geliefert.

SYNTHESIZER UNIT (X14-5002-71)

Ref. No. 参照番号	Address 位置	New Parts 新	Parts No. 部品番号	Description 部品名／規格	Destination 仕向	Remarks 備考
D31			MA8120-M	ZENER DIODE		
D34 -39			MA110	DIODE		
D34 -39			1SS355	DIODE		
D40 -48			MA8062-M	ZENER DIODE		
D501			MA110	DIODE		
D501			1SS355	DIODE		
IC1			LC7218M	IC(PLL FREQUENCY SYNTHESIZER)		
IC2		*	TC4W66F	IC		
IC3 ,4			NJM4565MD	IC(OP AMP X2)		
IC5		*	SAA6579T	IC		
IC6			LC6543H-4600	IC		
IC7			·····	CUSTOM IC		
IC8			TA7291P	IC(MOTOR DRIVER)		
IC9		*	LC3564QM-10	IC		
IC9		*	LH5168H1	IC		
IC10			TC74HC573AF	IC(LATCH)		
IC11			M5237ML	IC(VOLTAGE REGULATOR)		
IC12		*	PST572FMT	IC		
IC13,14			AN7174K	IC(AF AMP)		
IC15			SN74HC367ANS	IC		
IC16		*	M38067M8D094FP	IC		
IC17			75004GB-864-3B4	IC		
IC51		*	KKC04	CUSTOM IC		
IC52		*	TA75S393F	IC		
Q1 ,2			2SC2412K	TRANSISTOR		
Q3 ,4			2SC2413K	TRANSISTOR		
Q5			DTA124EK	DIGITAL TRANSISTOR		
Q5			XDA124EK	TRANSISTOR		
Q6			DTC124EK	DIGITAL TRANSISTOR		
Q6			XDC124EK	TRANSISTOR		
Q7			DTA144EK	DIGITAL TRANSISTOR		
Q8 ,9			2SA1428	TRANSISTOR		
Q10			2SK536	FET		
Q12			DTC144EK	DIGITAL TRANSISTOR		
Q12			XDC144EK	TRANSISTOR		
Q13			2SA1037K	TRANSISTOR		
Q14			2SK536	FET		
Q15 -17			2SC2412K	TRANSISTOR		
Q18			2SA1037K	TRANSISTOR		
Q19			2SC2412K	TRANSISTOR		
Q20			DTC144EK	DIGITAL TRANSISTOR		
Q20			XDC144EK	TRANSISTOR		
Q21			DTA144EK	DIGITAL TRANSISTOR		
Q22 -24			DTC144EK	DIGITAL TRANSISTOR		
Q22 -24			XDC144EK	TRANSISTOR		
Q25			DTA124EK	DIGITAL TRANSISTOR		
Q25			XDA124EK	TRANSISTOR		
Q26			2SC2412K	TRANSISTOR		
Q27			DTC144EK	DIGITAL TRANSISTOR		
Q27			XDC144EK	TRANSISTOR		
Q28			DTB123YK	DIGITAL TRANSISTOR		
Q29			2SC2412K	TRANSISTOR		
Q30			2SA1408(O)	TRANSISTOR		
Q31 ,32			DTC124EK	DIGITAL TRANSISTOR		
Q31 ,32			XDC124EK	TRANSISTOR		

E : Europe **W** : Without Europe **P** : Canada **X** : Australia
K : U.S.A. and Canada **M** : Without Europe, U.S.A. and Canada

⚠ indicates safety critical components.

KRC-954R

PARTS LIST

* New Parts
Parts without **Parts No.** are not supplied.
Les articles non mentionnes dans le **Parts No.** ne sont pas fournis.
Teile ohne **Parts No.** werden nicht geliefert.

SYNTHESIZER UNIT (X14-5002-71)

Ref. No. 参照番号	Address 位置	New Parts 新	Parts No. 部品番号	Description 部品名／規格	Destination 仕向	Remarks 備考
Q33			2SB1370F8	TRANSISTOR		
Q34			DTA114EK	DIGITAL TRANSISTOR		
Q35			2SB1370F8	TRANSISTOR		
Q36			2SC2412K	TRANSISTOR		
Q37			DTA114EK	DIGITAL TRANSISTOR		
Q38			DTC144EK	DIGITAL TRANSISTOR		
Q38			XDC144EK	TRANSISTOR		
Q39			2SB1370F8	TRANSISTOR		
Q40			2SC2412K	TRANSISTOR		
Q41			DTB123YK	DIGITAL TRANSISTOR		
Q42			DTC144EK	DIGITAL TRANSISTOR		
Q42			XDC144EK	TRANSISTOR		
Q43			2SA1036K	TRANSISTOR		
Q44			2SC2412K	TRANSISTOR		
Q48			DTA144EK	DIGITAL TRANSISTOR		
Q49			DTC144EK	DIGITAL TRANSISTOR		
Q49			XDC144EK	TRANSISTOR		
Q50			2SC2412K	TRANSISTOR		
Q51			DTC144EK	DIGITAL TRANSISTOR		
Q51			XDC144EK	TRANSISTOR		
Q52 -55			DTA124EK	DIGITAL TRANSISTOR		
Q52 -55			XDA124EK	TRANSISTOR		
Q56			DTC124EK	DIGITAL TRANSISTOR		
Q56			XDC124EK	TRANSISTOR		
Q57			DTC144EK	DIGITAL TRANSISTOR		
Q57			XDC144EK	TRANSISTOR		
Q58			2SC2412K	TRANSISTOR		
Q59			2SA1037K	TRANSISTOR		
Q60			DTC124EK	DIGITAL TRANSISTOR		
Q60			XDC124EK	TRANSISTOR		
Q61			DTA124EK	DIGITAL TRANSISTOR		
Q61			XDA124EK	TRANSISTOR		
Q62			2SA1428	TRANSISTOR		
Q63			DTC114EK	DIGITAL TRANSISTOR		
Q64 ,65			2SC2412K	TRANSISTOR		
Q66 ,67			2SA1428	TRANSISTOR		
Q68 ,69			DTD123YK	DIGITAL TRANSISTOR		
Q70 ,71			DTC144EK	DIGITAL TRANSISTOR		
Q70 ,71			XDC144EK	TRANSISTOR		
Q72			DTA144EK	DIGITAL TRANSISTOR		
Q73			2SC2411K	TRANSISTOR		
Q74			DTA144EK	DIGITAL TRANSISTOR		
Q75			DTC124EK	DIGITAL TRANSISTOR		
Q75			XDC124EK	TRANSISTOR		
Q76			DTA144EK	DIGITAL TRANSISTOR		
Q77			DTC144EK	DIGITAL TRANSISTOR		
Q77			XDC144EK	TRANSISTOR		
Q80			2SC2411K	TRANSISTOR		
Q502			DTA144EK	DIGITAL TRANSISTOR		
Q503			2SC2412K	TRANSISTOR		
Q505			2SC2412K	TRANSISTOR		
TU1	2D	*	W02-1398-05	FM/AM FRONT-END		

E : Europe **W** : Without Europe **P** : Canada **X** : Australia
K : U.S.A. and Canada **M** : Without Europe, U.S.A. and Canada

⚠ indicates safety critical components.

PARTS LIST

* New Parts
Parts without **Parts No.** are not supplied.
Les articles non mentionnes dans le **Parts No.** ne sont pas fournis.
Teile ohne **Parts No.** werden nicht geliefert.

Ref. No. 参照番号	Address 位置	New Parts 新	Parts No. 部品番号	Description 部品名／規格	Destination 仕向	Remarks 備考
SWITCH UNIT (X25-7042-71)						
294	1E		B11-0850-04	OPTICAL DIFFUSER		
295	2E		B19-0936-04	LIGHTING BOARD		
D1 -13			B30-1349-05	LED		
LCD1	2E	*	B38-0587-05	LIQUID CRYSTAL		
PL1			B30-1306-05	LAMP (5.5V .125A)		
PL2 ,3			B30-1305-05	LAMP (5.5V .125A)		
PL4			B30-1306-05	LAMP (5.5V .125A)		
C1			CK73EB1H103K	CHIP C 0.01UF K		
C2			CK73EB1H681K	CHIP C 680PF K		
C3			CK73EB1H103K	CHIP C 0.01UF K		
C4			CK73EB1H681K	CHIP C 680PF K		
C5 ,6			CC73FCH1H220J	CHIP C 22PF J		
C7			C92-0005-05	ELECTRO 2.2UF 6.3WV		
C8			C92-0509-05	TANTAL 10UF 6.3WV		
C9			C92-0005-05	ELECTRO 2.2UF 6.3WV		
C10			C92-0004-05	ELECTRO 1.0UF 16WV		
296	2E		E29-1399-04	CONDUCTIVE RUBBER		
CN1			E59-0809-05	RECTANGULAR PLUG		
297	2E		J19-4492-13	HOLDER		
X1			L78-0505-05	RESONATOR		
R1 -4			RK73FB2A102J	CHIP R 1.0K J 1/10W		
R5			RK73EB2B331J	CHIP R 330 J 1/8W		
R6 ,7			RK73EB2B471J	CHIP R 470 J 1/8W		
R8 ,9			RK73EB2B513J	CHIP R 51K J 1/8W		
R10 ,11			RK73FB2A104J	CHIP R 100K J 1/10W		
R12			RK73EB2B104J	CHIP R 100K J 1/8W		
R13 ,14			RK73FB2A104J	CHIP R 100K J 1/10W		
R15 -19			RK73FB2A102J	CHIP R 1.0K J 1/10W		
R20 ,21			RK73EB2B102J	CHIP R 1.0K J 1/8W		
R22 -24			RK73FB2A102J	CHIP R 1.0K J 1/10W		
R25			RK73EB2B103J	CHIP R 10K J 1/8W		
R26			RK73FB2A103J	CHIP R 10K J 1/10W		
R27			RK73FB2A472J	CHIP R 4.7K J 1/10W		
R28			RK73FB2A101J	CHIP R 100 J 1/10W		
R29			RK73EB2B472J	CHIP R 4.7K J 1/8W		
R30			RK73EB2B471J	CHIP R 470 J 1/8W		
R31 -33			RK73EB2B331J	CHIP R 330 J 1/8W		
R34			RK73EB2B471J	CHIP R 470 J 1/8W		
R35			RK73EB2B331J	CHIP R 330 J 1/8W		
R36			RK73EB2B471J	CHIP R 470 J 1/8W		
R39			RK73FB2A102J	CHIP R 1.0K J 1/10W		
R40 -42			RK73EB2B102J	CHIP R 1.0K J 1/8W		
R43			RK73FB2A102J	CHIP R 1.0K J 1/10W		
S1 ,2			S40-1601-15	PUSH SWITCH		
S3 ,4			S40-1606-05	PUSH SWITCH		
S5 -10			S40-1601-15	PUSH SWITCH		
S11			S40-1606-05	PUSH SWITCH		
S13 -21			S40-1606-05	PUSH SWITCH		
S22 -25			S40-1601-15	PUSH SWITCH		
S26		*	S70-0814-05	TACT SWITCH		

E : Europe **W** : Without Europe **P** : Canada **X** : Australia
K : U.S.A. and Canada **M** : Without Europe, U.S.A. and Canada

⚠ indicates safety critical components.

KRC-954R

PARTS LIST

* New Parts
Parts without **Parts No.** are not supplied.
Les articles non mentionnes dans le **Parts No.** ne sont pas fournis.
Teile ohne **Parts No.** werden nicht geliefert.

SWITCH UNIT (X25-7042-71)

Ref. No. 参照番号	Address 位置	New Parts 新	Parts No. 部品番号	Description 部品名／規格	Destination 仕向	Remarks 備考
D14 -22			MA8062-M	ZENER DIODE		
D24 -28			MA8062-M	ZENER DIODE		
IC1			75004GB-863-3B4	IC		
IC2			PST572DMT	IC(SYSTEM RESET)		
IC3			RS-21	IC		
IC4 ,5			LC7582E	IC(LCD DRIVER)		
Q1			DTA143XK	DIGITAL TRANSISTOR		
Q2			DTC144EK	DIGITAL TRANSISTOR		
Q2			XDC144EK	TRANSISTOR		
DAUGHTER UNIT (X89-2002-71)						
C1			CK73EB1H104K	CHIP C 0.10UF K		
C2			CK73EB1H683K	CHIP C 0.068UF K		
C3			C92-0006-05	TANTAL 3.3UF 4WV		
C4 -6			CK73FB1H223KTA	CHIP C 0.022UF K		
C7 -14			C93-1026-05	CERAMIC 0.33UF 16WV		
CN1			E58-0820-05	RECTANGULAR RECEPTACLE		
CN2			E40-9198-05	PIN ASSY		
CN3		*	E40-9289-05	PIN ASSY		
CN4		*	E40-9147-05	PIN ASSY		
CN5			E40-9145-05	PIN ASSY		
CN6			E40-3268-05	PIN ASSY		
CN7		*	E40-9091-05	SOCKET FOR PIN ASSY		
R1			R92-0366-05	CHIP R 560 J 1W		
R2			RK73EB2B223J	CHIP R 22K J 1/8W		
R3			R92-0365-05	CHIP R 1K J 1/2W		
R4			RK73FB2A472J	CHIP R 4.7K J 1/10W		
R5			RK73FB2A103J	CHIP R 10K J 1/10W		
R8 -15			RK73EB2B2R2J	CHIP R 2.2 J 1/8W		
D1 -3			ERA15-01Y1	DIODE		
D5			MA110	DIODE		
D5			1SS355	DIODE		
Q1			DTA124EK	DIGITAL TRANSISTOR		
Q1			XDA124EK	TRANSISTOR		
Q2			2SA1037K	TRANSISTOR		
Q3			2SB822F	TRANSISTOR		
Q4			DTC114EK	DIGITAL TRANSISTOR		
MECHANISM ASSY (X92-1710-06)						
3	2B		A11-0801-52	SUB CHASSIS CALKING ASSY		
5	1A,2A		A11-0858-04	SUB CHASSIS CALKING ASSY		
7	2A	*	B09-0504-24	CAP		
8	3A		D01-0601-13	FLYWHEEL ASSY		
14	1A		D10-2505-13	ARM ASSY		
16	1B		D10-2507-23	ARM ASSY		
21	1B		D10-2512-13	ARM		
23	2A		D10-2514-13	ARM		
24	3A		D10-2515-24	ARM ASSY		
26	3B		D10-2517-53	LEVER		
27	2B		D10-2518-33	LEVER		
28	1B		D10-2519-04	ARM ASSY		
30	1B		D10-2521-04	LEVER		
31	2A		D13-1001-04	GEAR ASSY		
34	3A		D13-1004-24	GEAR ASSY		

E : Europe **W** : Without Europe **P** : Canada **X** : Australia
K : U.S.A. and Canada **M** : Without Europe, U.S.A. and Canada

⚠ indicates safety critical components.

PARTS LIST

* New Parts
Parts without **Parts No.** are not supplied.
Les articles non mentionnes dans le **Parts No.** ne sont pas fournis.
Teile ohne **Parts No.** werden nicht geliefert.

MECHANISM ASSY (X92-1710-06)

Ref. No. 参照番号	Address 位置	New Parts 新	Parts No. 部品番号	Description 部品名／規格	Destination 仕向	Remarks 備考
37	2B		D13-1007-24	GEAR		
38	1B		D13-1008-54	GEAR ASSY		
40	1B		D13-1010-14	GEAR		
41	1B		D13-1011-04	GEAR		
42	1B		D13-1012-04	GEAR		
43	1B		D13-1013-43	GEAR		
44	3A		D13-1015-24	GEAR		
45	2B		D13-1016-23	GEAR		
46	1B		D14-0601-13	PINCH ROLLER ASSY		
48	1A		D14-0603-13	PINCH ROLLER ASSY		
49	2B		D14-0604-04	ROLLER		
50	3B		D14-0605-04	ROLLER		
53	2A		D15-0901-14	PULLEY		
54	3B		D15-0902-34	PULLEY		
55	3A		D16-0601-04	BELT		
72	2A		D21-2018-14	SHAFT ASSY		
73	3B		F10-1716-24	SHIELDING PLATE		
80	2A		G01-2502-14	COMPRESSION SPRING		
83	3A		G01-2505-24	EXTENSION SPRING		
84	1B		G01-2506-14	EXTENSION SPRING		
85	2A		G01-2507-14	TORSION COIL SPRING		
86	2A		G01-2508-24	TORSION COIL SPRING		
87	1B		G01-2509-14	TORSION COIL SPRING		
88	2B		G01-2510-24	TORSION COIL SPRING		
89	1B		G01-2511-24	EXTENSION SPRING		
91	1A		G09-2001-24	FORMED WIRE		
92	1B		G09-2002-24	FORMED WIRE		
103	2B		J19-4452-03	BRACKET		
105	1A		J19-4417-24	HOLDER ASSY		
B	2A		N39-1770-46	PAN HEAD MACHIN SCREW		
C	1A		N09-4005-05	MACHINE SCREW (M2)		
D	2B		N09-4006-15	MACHINE SCREW (M1.7)		
E	1A		N09-4061-05	MACHINE SCREW (M2X 4)		
F	2B		N38-2020-46	PAN HEAD MACHIN SCREW		
G	3A		N39-2022-46	PAN HEAD MACHIN SCREW		
H	1B,2B		N35-2003-46	BINDING HEAD MACHINE SCREW		
J	2A,2B		N86-2004-46	BINDING HEAD TAPTITE SCREW		
K	2A,3B		N19-2003-04	FLAT WASHER		
L	1B,2A		N19-2023-04	FLAT WASHER		
M	3B		N19-2005-04	FLAT WASHER		
N	2A		N19-2006-04	FLAT WASHER		
P	2B		N19-2008-04	FLAT WASHER		
Q	2A,3A		N19-0373-04	FLAT WASHER		
S	2A		N29-0208-04	RETAINING RING (3)		
T	1B		N29-0205-04	RETAINING RING (1.5)		
U	3A		N29-0501-05	RETAINING RING		
W	1A		N19-1096-04	FLAT WASHER		
HD1	1A		T31-0212-05	PLAYBACK HEAD		
M1	2A		T42-0702-25	DC MOTOR		
M2	2B		T42-0704-15	DC MOTOR		

E : Europe **W** : Without Europe **P** : Canada **X** : Australia
K : U.S.A. and Canada **M** : Without Europe, U.S.A. and Canada

⚠ indicates safety critical components.

KRC-954R

SPECIFICATIONS

FM tuner section

Frequency range ..... 87.5MHz~108.0MHz
Usable sensitivity 1.1μV/75Ω
Stereo sensitivity (S/N=46dB) 1.6μV/75Ω
Frequency response (±4.5dB) ..... 30Hz~15kHz
Signal to noise ratio (IEC-A) 68dB
Selectivity ..... 70dB (±400kHz)
40dB (±200kHz : K2I OFF)
75dB (±200kHz : K2I ON)
Stereo separation (1kHz) 35dB
19kHz carrier leakage 65dB

MW tuner section

Frequency range ..... 531kHz~1611kHz
Usable sensitivity 30μV

LW tuner section

Frequency range ..... 153kHz~281kHz
Usable sensitivity 60μV

Cassette deck section

Tape speed ..... 4.76cm/sec.
Wow & flutter (WRMS) ..... 0.09% WRMS
Fast winding time 100sec. (C-60)
Frequency response(+4dB, –6dB)
..... 30Hz~18kHz (120μs)
30Hz~20kHz (70μs)
Stereo separation (1kHz) 40dB
Signal to noise ratio (IEC-A)
..... Dolby B·C NR OFF : 55dB
Dolby B NR ON : 65dB
Dolby C NR ON : 72dB

Audio section

Power output ..... 25Wx4 max power output
20Wx4 into 4Ω, 1kHz at 10% THD
15Wx4 into 4Ω, at 1kHz at 1% THD
Tone action ..... Bass : 100Hz±10dB
Treble : 10kHz±10dB
Preout level/impedance ..... 800mV (max)/180Ω

General

Operating voltage ..... 14.4V (11~16V allowable)
Current consumption ..... 7.5A at rated power
Dimensions (WxHxD) 188x58x175mm
Installation size 182x52x154mm
Weight 1500g

Note : KENWOOD follows a policy of continuous advancements in development. For this reason specifications may be changed without notice.

Note :
Component and circuitry are subject to modification to insure best operation under differing local conditions. This manual is based on, the Europe (E) standard, and provides information on regional circuit modification through use of alternate schematic diagrams, and information on regional component variations through use of parts list.

KENWOOD CORPORATION
Alive Mitake, 2-5, 1-chome Shibuya, Shibuya-ku, Tokyo 150, Japan
KENWOOD SERVICE CORPORATION
P.O. BOX 22745, 2201 East Dominguez St., Long Beach, CA 90801-5745, U.S.A.
550 Clark Drive, Mount Olive, New Jersey 07828, U.S.A.
99-994 Iwaena St. Aiea, Hawaii 96701
KENWOOD ELECTRONICS CANADA INC.
6070 Kestrel Road, Mississauga, Ontario, Canada L5T 1S8
KENWOOD ELECTRONICS LATIN AMERICA S.A.
P.O. BOX 55-2791, Piso 6 Plaza Chase, Cl. 47 y Aquilino de la Guardia, Panama, Republic de Panama
TRIO-KENWOOD U.K. LIMITED
KENWOOD House, Dwight Road, Watford, Herts., WD1 8EB United Kingdom
KENWOOD ELECTRONICS BENELUX N.V.
Mechelsesteenweg 418 B-1930 Zaventem, Belgium
KENWOOD ELECTRONICS DEUTSCHLAND GMBH
Rembrücker-Str. 15, 63150 Heusenstamm, Germany
TRIO-KENWOOD FRANCE S.A.
13 Boulevard Ney, 75018 Paris, France
KENWOOD ELECTRONICS ITALIA S.p.A.
Via G. Sirtorl, 7/9 20129 Milano, Italy
KENWOOD ESPAÑA S.A.
Bolivia, 239-08020 Barcelona, Spain
KENWOOD ELECTRONICS AUSTRALIA PTY. LTD. (A.C.N. 001 499 074)
P.O. BOX 504, 8 Figtreel Drive, Australia Centre, Homebush, N.S.W. 2140, Australia
KENWOOD & LEE ELECTRONICS, LTD.
Unit 3712-3724, Level 37 Tower 1, Metroplaza, 223 Hing Fong Road, Kwai Fong N.T. Hong Kong
KENWOOD ELECTRONICS SINGAPORE PTE LTD.
No. 1 Genting Lane #07-00, Singapore, 1334